PRESSURE MEASUREMENT TRANSMITTERS

LD400 SERIES

- *± 0.045% Accuracy*
- *± 0.2% of URL Stability Guarantee For 12 Years*
- *200:1 Rangeability*
- *35 ms Total Response Time*
- *Non-volatile Totalizer (not available for WirelessHART™)*
- *Tank Linearization*
- *PID Control Capability (not available for WirelessHART™)*
- *Advanced Diagnostics*
- *Bi-directional Flow Measurement*
- *Supports DD, EDDL, and FDT/DTM*
- *Non-polarity Power Input*
- *Built-in Transient Suppression*
- *TUV certified for safety applications*

HART COMMUNICATION PROTOCOL

WirelessHART

FDT

FDI

Pressure, Level and Flow

LD400 Series

The Smar LD400 transmitter was developed to be a robust and highly reliable solution for pressure measurement. Offers great flexibility in applications due to the use of a capacitive sensor that maintains the digital signal from the sensor reading to the transmitter output, resulting in high effective resolution.

smar
Technology Company

Features

- Low Total Probable Error (TPE);
- User-friendly rotative display;
- Local Span/Zero calibration and easy on-site configuration;
- Easy installation, quick commissioning and setup;
- Online continuous sensor and electronic diagnostics reduce troubleshooting time and eliminate unnecessary trips to the field;
- Modularity for all models;
- Persistent Totalizer (not available for *Wireless*HART™);
- Transfer functions: linear, linearization table, $\sqrt{x}$, $\sqrt{x^3}$, $\sqrt{x^5}$;
- Configurable user unit;
- Span as small as 50 Pa (0.2 inH_2O) up to a range limit of 40 MPa (5800 psi);
- Up to 32 MPa static pressure (4600 psi);
- 10,000 psi Burst Pressure Limit;
- Wide pressure ranges and applications.

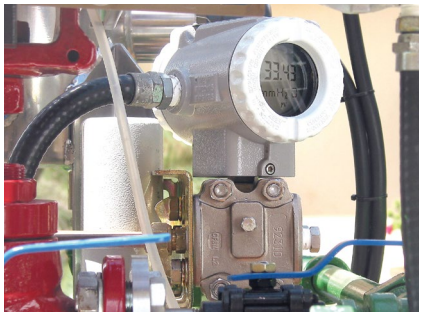

HART®

- Output current with 0.75 µA resolution;
- Output Limits according to NAMUR NE43;
- Software Management according to NAMUR NE53;
- Based on technology proven in use since the early '80s;
- Built-in surge protection;
- Fully selectable constant mA output (Loop Test capability);
- The LD400SIS is certified to IEC61508 for SIL 1 and SIL 2 (non-redundant) and SIL 3 (redundant) applications.

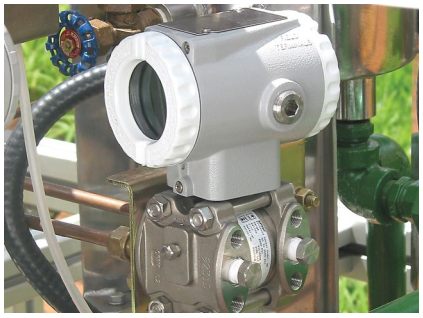

*Wireless*HART™

- Repeaters/Routers function in the mesh network;
- "Burst Mode" for periodical sending of commands;
- Powered by long life battery;
- HART® 7 / *Wireless*HART™ protocol;
- Status diagnostics;
- Distance up to 250 m from other network equipment;
- Mesh network topology;
- Hardware and software write protection;
- Wireless standard IEEE 802.15.4-2006 @ 250 kbps;
- Frequency band 2.4 GHz.

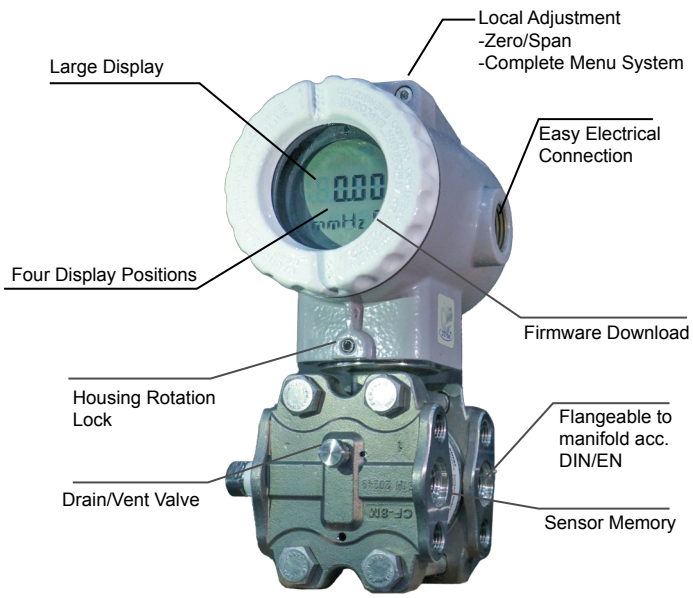

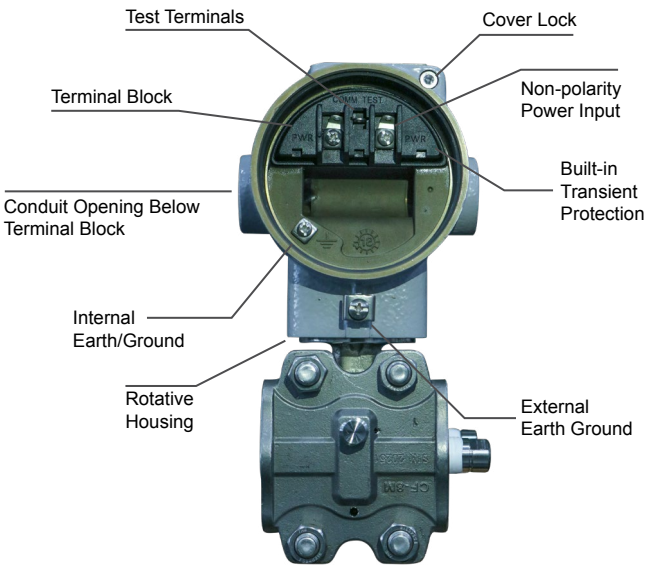

LD400 HART® Functional Description

LD400 consists of differential, absolute and gauge pressure transmitters as well as models for sanitary, level, and remote seal applications. The **LD400** offers the best solution for all field applications and those demanding high performance.

LD400 offers:

- ± 0.045% accuracy for High Performance option;
- ± 0.2 % of URL stability guarantee for 12 years;
- 200:1 rangeability;
- Compact and lightweight;
- Safe and reliable operation.

LD400 uses the field-proven technique of capacitance cell sensor measurement.

The sensor is shown in the picture on side. The sensing diaphragm **(1)** is at the cell center. The diaphragm deflects as a result of the difference between the pressures applied to the left and right sides of the sensor (PH and PL). Pressure is directly applied to the isolating diaphragms **(2)**, which provide resistance against process fluid corrosion. The pressure is transmitted to the sensing diaphragm through the filling fluid **(3)**.

The sensing diaphragm is a moving capacitor plate while the two metallized surfaces **(4)** are fixed plates. The sensing diaphragm deflection results in capacitance variations between the moving and fixed plates.

The electronic resonance circuit reads capacitance variation between the moving and fixed plates. The CPU conditions the measurement and communicates according to protocol. As there is no A/D conversion, errors and drifts during conversions are eliminated. A temperature

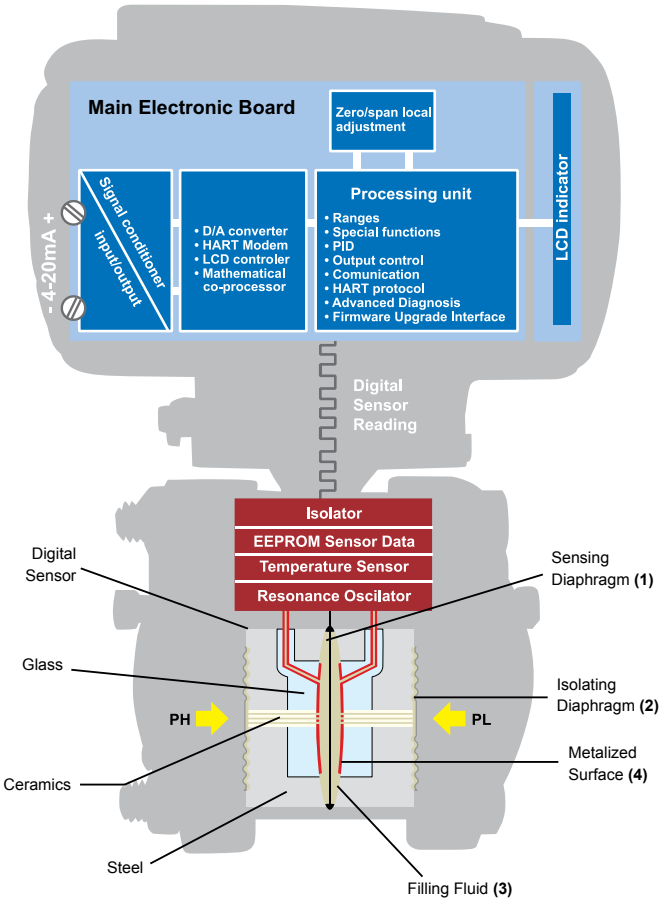

sensor provides temperature compensations, which combined with the sensor precision, results in high accuracy and rangeability for the **LD400**.

The process variable, as well as monitoring and diagnostics information, is provided by digital communication protocol.

*Wireless*HART™ Technology

The world dedicated HART® technology now offers a robust protocol designed for numerous applications, with the advantage of the wireless feature. Economy installation and efficient management of energy, quick access to information from the field, strength in communication and information integrity, network security: this and so many other advantages that make *Wireless*HART™ technology (more on www.fieldcommgroup.org) which came to the world of automation to innovate and revolutionize.

Based on a communication protocol for wireless mesh network, the *Wireless*HART™ protocol ensures compatibility between instruments, commands and existing HART® tools. Basically, a *Wireless*HART™ network is composed of elements like the figure beside.

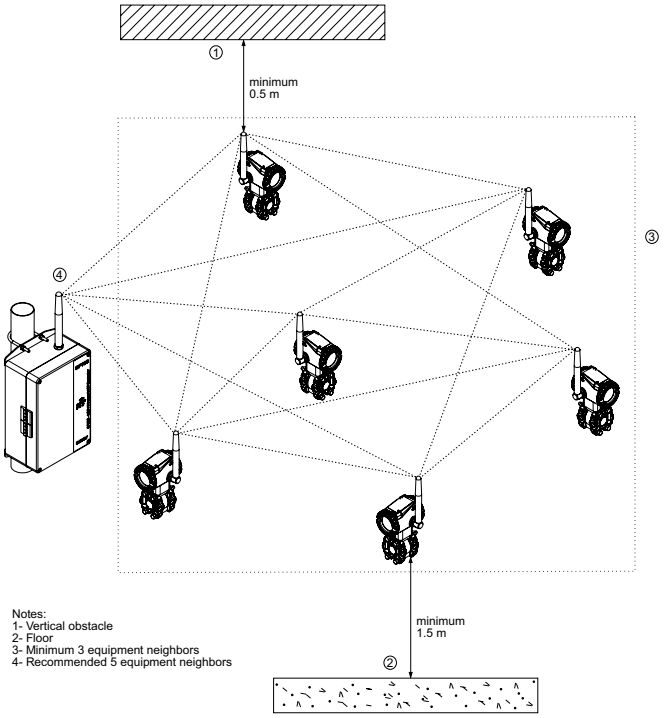

The picture elements on the network, constitute the mesh network. They are:

- Host – The host, usually connected to the control network, is a workstation in which a Human Machine Interface application can be installed, which allows an operator to interact with the process through the Gateway. It commonly uses protocols such as Profibus, High Speed Ethernet (HSE), among others.

- WirelessHART™ Gateway – This is a “translator” device. This converts both data from the host to the WirelessHART protocol, used by instruments connected to the WirelessHART network, and data from the instruments to the host. In general, the WirelessHART Gateway incorporates Network Manager, Security Manager, and Access Point functionality.

- WirelessHART Field Devices – These are devices connected directly to the process, such as the TT400 and the LD400 WirelessHART by Smar. They act, in addition to their functionalities of process variables transducers, as transmitters and routers (repeaters), being able to retransmit messages to/from other instruments on the network.

- WirelessHART Adapter – is a “bridge” instrument, capable of making data from a HART 4 to 20mA field device (wired) available to the WirelessHART host (wireless), thus allowing a conventional HART field device to be part of a network like the one discussed.

The *Wireless*HART™ instruments should be field installed and configured the same way as conventional HART® instruments. This is possible with the DD (Device Description) files updated and uploaded to the HART configurator, that can be used normally. The *Wireless*HART™ instruments can be either configured previouly in bench or at the time of installation.

Transmitter Models

Differential Pressure - LD400D and LD400H

Pressure is applied to high and low side and differential pressure is measured. High static pressure is supported for **LD400H** models.

Flow - LD400D and LD400H

The differential pressure is generated by a primary flow element and the square root function computes the flow measurement.

Gage Pressure - LD400M and LD400G

The pressure is measured at the high side of the transmitter and the low side is open to the atmosphere, providing true local atmospheric reference.

Absolute Pressure - LD400A

The pressure is measured at the high side of the transmitter and the low side is at zero absolute pressure to a sealed chamber with vacuum.

Level - LD400L and LD400I

The transmitter has a flange-mounted unit for direct installation on vessels. Extended diaphragms are also available. For closed tank applications, the low side can compensate the internal pressure.

Sanitary - LD400S

LD400S is especially designed for food and other applications where sanitary connections are required. With threaded or "tri-clamp" connections, it allows quick and easy cleaning and maintenance.
The flush connection enables deposit removal without disconnecting the seal.
For further information, see the Smar SR301 Series Catalog.

Remote Seals

SR301 is a remote seal designed for chemical and thermal isolation. **LD400** can be assembled with separate diaphragm seals in either one or both sides of the sensor. SR301 options include: “T” Type Flanged (SR301T), Threaded (SR301R), Pancake (SR301P) where those three models with an optional flush connection, Sanitary (SR301S), and Flanged with Extension (SR301E).

Typical applications for **LD400** with remote seals:

- Corrosive process fluid;
- Suspended solids or viscous process fluid;
- Process fluids that may freeze or solidify;
- Process temperatures higher than supported by transmitters;
- Replaces impulse lines and condensate legs;
- Bubble system.

See the SR301 Series Catalog for further information regarding application and specification.

Certificate for Use is SIS Applications

LD400 HART SIS is certified by TUV and meet the recomendations IEC 61508 standard for SIS (Safety Instrumented Systems) applications. For more information about SIS, please consult LD400 Operations, Maintenance and Instructions Manual.

Note:

The **LD400 HART® SIS** has a red cover to differentiate it from the standard model.

Parameterization and Diagnostics

LD400 is available in HART® technology. These instruments can be configured with Smar software and other manufacturer configuration tools. Local adjustment is available in all **LD400**. It is possible to configure zero and span, totalization, setpoint and other control functions using the magnetic screwdriver.
Smar has developed AssetView, which is a user-friendly Web Tool that can be accessed anywhere and anytime using an internet browser. It is designed for management and diagnostics of field devices, to ensure reactive, preventive, predictive and proactive maintenance.

Local Adjustment

LD400 with HART® protocol can be configured by:

- DEVCOMDROID Smar software, used with HI331 (Bluetooth Interface);
- Other manufacturers' configuration tools based on DD (Device Description), Simatic PDM, and FDT/DTM, such as AMSTM, FieldCareTM, PACTwareTM, HHT275 and HHT375, PRM Device Viewer.

For **LD400** management and diagnostics, AssetView ensures continuous information monitoring.

Advanced Diagnostics

Smar **LD400** provides diagnostics on several levels allowing quick maintenance and in a safe way:

- Sensor Level
- Electronics Level
- Loop integrity Level

The **LD400** performs advanced diagnostics upon powering up the instrument. It verifies the integrity of important data in order for the device to work properly: the characterization data, the customer entered data, the calibration data and the RAM memory.
During the operation, the validity of the measured pressure is continuously checked. Using advanced algorithms, the transmitter can identify when there is a failure and if it is due to a hardware failure or a process overload condition. It also checks over and under temperature conditions. The user can configure the safe condition according to NAMUR NE43. When the result is failure it can cause an incorrect output, the transmitter will immediately switch the output current allowing actions by the user to identify and correct the problem.
The **LD400 SIS** model not only includes all the previously mentioned diagnostics but also some extra ones to reach the required safety level. They are:

- 4-20 mA Current Output Monitoring;
- Memory and CPU Integrity Checking;
- Crystal Monitoring;
- Firmware Execution Sequence Monitoring.

HART®

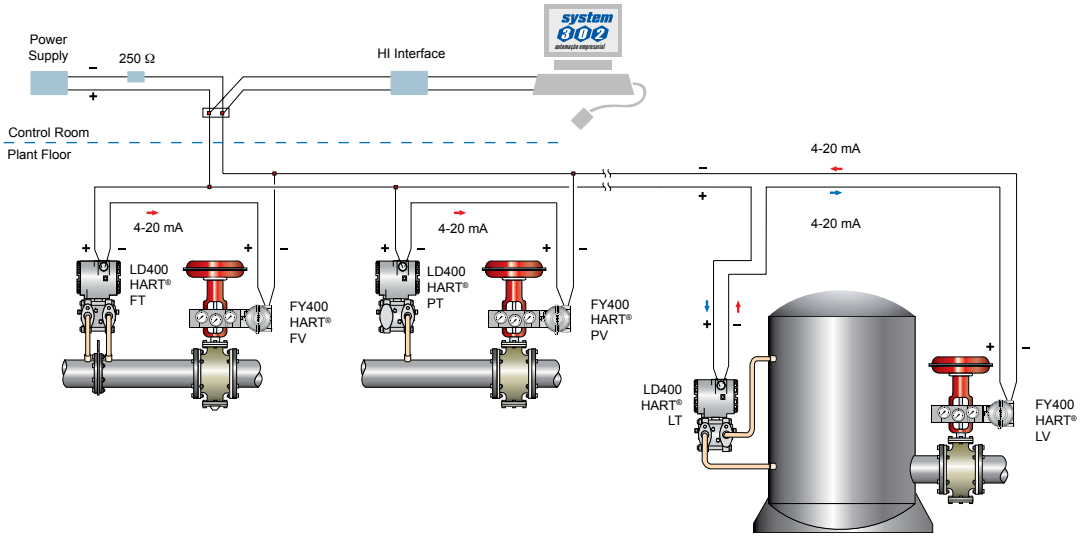

*Wireless*HART™

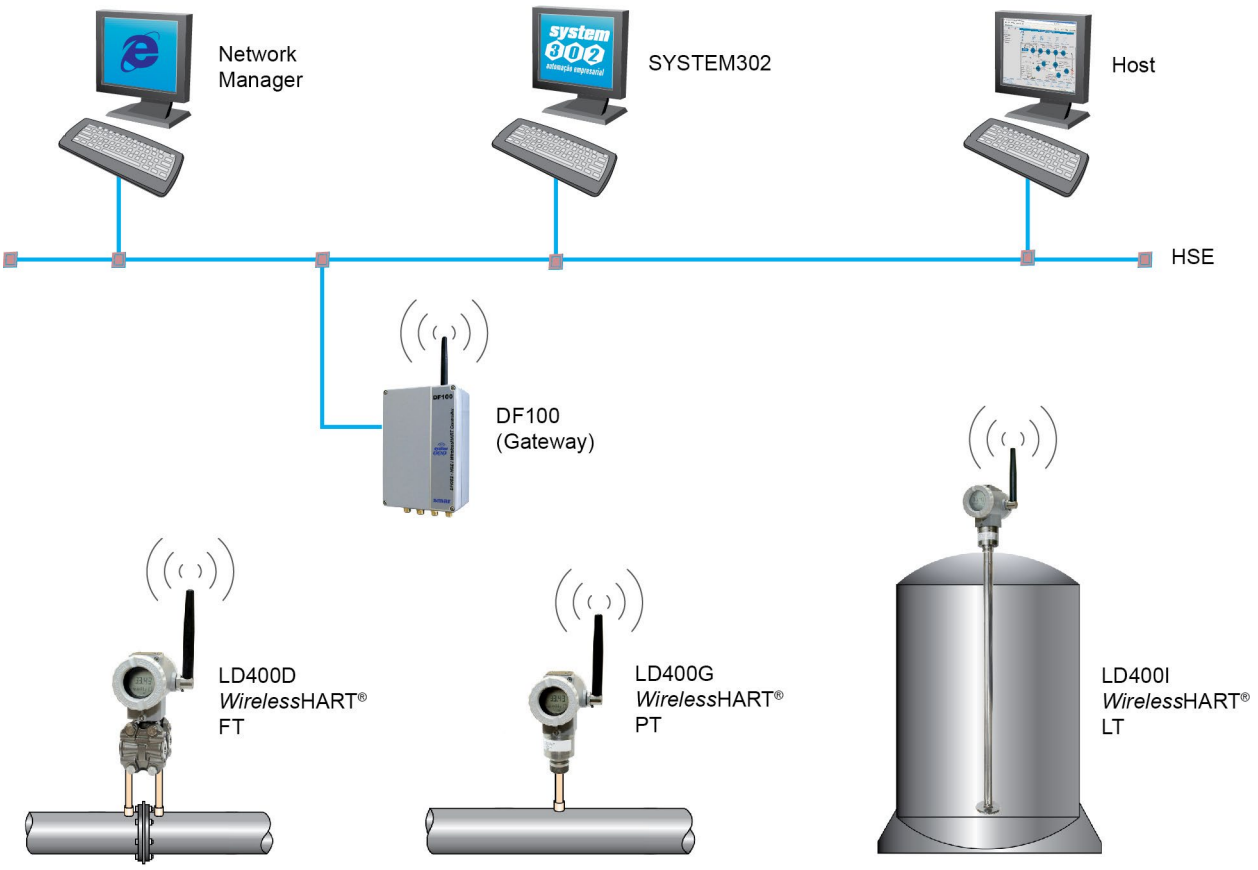

Functional Specifications

Process Fluid	Liquid, gas or steam.
Output and Communication Protocol	**HART®:** Two-wire, 4-20 mA controlled according to NAMUR NE43 specification, with super-imposed digital HART® Protocol. ***Wireless*HART™**: HART® Version 7 protocol, with LD400 *Wireless*HART™ command set. A HART® transmitter specific review must be managed according to the LD400 *Wireless*HART™ transmitter.
Power Supply	**HART®:** 12 to 55 Vdc. Input without polarization, with protection for transient suppressor and complemen-ted by a surge arrester. Transient Suppressor: Vmax = 65 Vp; Differential Mode - bi-directional; Low current leak and capacitance; Meets the standards: IEEE61000-4-4 and IEEE61000-4-5; Less than 5 ns response time. Lightning Arrester: V = 1000 Vdc; Discharge current peak = 10 kA; Nominal current = 10 A for 1 s; Commom mode - low leak current and low capacitance ***Wireless*HART™**: The battery pack consists of two primary lithium batteries of 3.6 V, totaling 7.2 V. Battery duration: - Update every 8s: 4 years.
Indicator	Rotative LCD, with 4½-numerical digit and 5-character alphanumerical. Function and status icons.
Hazardous Area Certifications	**HART®:** INMETRO (Explosion Proof and Intrinsic Safety), ATEX (Explosion Proof and Intrinsic Safety) and IECEx (Intrinsic Safety) ***Wireless*HART™**: INMETRO, ATEX and IECEx (Intrinsic Safety)
European Directive Information	**PED Directive 2014/68/EU - "Pressure Equipment"** This product is in compliance with Article 4 paragraph 3 of the Pressure Equipment Directive 2014/68/EU and was designed and manufactured in accordance with the sound engineering practice. This equipment cannot bear the CE marking related to PED compliance. However, the product bears the CE marking to indicate compliance with other applicable European Community Directives. **EMC Directive 2014/30/EU - "Electromagnetic Compatibility" (applicable from 20 April 2016)** For products evaluation the standard IEC 61326-1 were consulted and to comply with the EMC directive the installation must follow these special conditions: Use shielded, twisted-pair cable for powering the instrument and signal wiring. Keep the shield insulated at the instrument side, connecting the other one to the ground. **ATEX Directive 2014/34//EU - "Equipment for explosive atmospheres"** The EC-Type Examination Certificate is released by DNV Product Assurance AS (CE2460) and UL International Demko AS (CE0539). Designated certification body that monitors manufacturing and released QAN (Quality Assurance Notification) and QAR (Quality Assessment Report) is Nemko AS (CE0470) and UL International Demko AS (CE0539).

European Directive Information (continuation)	**LVD Directive 2014/35/EU – "Low Voltage"** According the LVD directive Annex II, electrical equipment for use in an explosive atmosphere is outside the scope of this directive. According to IEC 61010-1 Safety requirements for electrical equipment for measurement, control, and laboratory use - Part 1: General requirements. **ROHS Directive 2011/65/EU - "Restriction of the use of certain hazardous substances in electrical and electronic equipment"** For the evaluation of the products the following standards were consulted: EN 50581
Zero and Span Adjustments	**HART®:** Local adjustment jumper with 3 positions: Simple, Disabled and Complete. ***Wireless*HART™**: Jumper of local adjustment with two positions: Enabled and Disabled.
Load Limitation	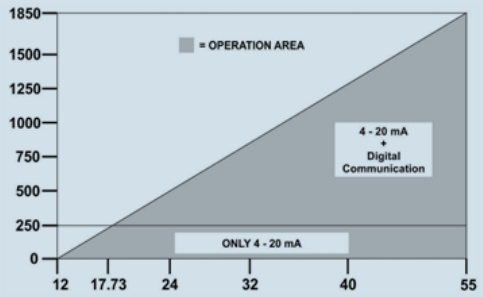
Failure Alarm (Diagnostics)	**HART®:** Detailed diagnostics through HART communicator. Sensor failure indication and overpressure indication. In case of sensor or circuit failure, the self-diagnostics drives the output to 3.6 or 21.0 mA, according to the user's choice and NAMUR NE43 specification. ***Wireless*HART™**: Detailed diagnostics via HART® communicator and via display. Indication of sensor failure and overpressure.
Temperature Limits	Ambient: -40 to 85 °C (-40 to 185 °F) Process: -40 to 100 °C (-40 to 212 °F) (Silicone Oil) -40 to 85 °C (-40 to 185 °F) (Inert Halocarbon Oil) 0 to 85 °C (32 to 185 °F) (Fluorolube Oil) -20 to 85 °C (-4 to 185 °F) (Inert Krytox Oil and Fomblim Oil) -25 to 100 °C (-13 to 212 °F) (Viton O'Ring) -40 to 150 °C (-40 to 302 °F) (Level Model) Storage: -40 to 100 °C (-40 to 212 °F) Digital Display: -20 to 80 °C (-4 to 176 °F) -40 to 85 °C (-40 to 185 °F) (Without Damage)

Configuration	Through digital communication, using DevComDroid configuration software (Android DDL Interpreter), used with HART interfaces, such as HI331 bluetooth interface. However, the old Palm with HPC301 or CONF401, which are obsolete, are still operable with the latest versions of HART transmitters. It can also be configured using DD and FDT/DTM tools, and can be partially configured through local adjustment. **LD400** and **LD400 *Wireless*HART**™ can be configured using third-party configuration tools. Writing-protection jumper.
Static Pressure Limits	70 psi (5 bar) for range 0 1200 psi (80 bar) for range 1 2300 psi (160 bar) for ranges 2, 3, and 4 4600 psi (320 bar) for H2 to H5 models Except for LD400A, LD400M, LD400G, and LD400I *Static pressure, in differential pressure measurement, is the pressure applied on both measuring chambers, simultaneously. For example, in flow measurement with restriction elements, the static pressure is the line pressure, present in both measuring chambers, simultaneously.*
Overpressure Limits	From 3.45 kPa abs. (0.5 psia) to: 0.5 MPa (72.52 psi) for range 0 8 MPa (1150 psi) for range 1 16 MPa (2300 psi) for range 2, 3 and 4 32 MPa (4600 psi) for models H and A5 40 MPa (5800 psi) for model M5 52 MPa (7500 psi) for models M6 and A6 Flange Test Pressure: 68.95 MPa (10000 psi) *Flange test is the maximum pressure applied to the transmitter without damage to the measuring set.* Overpressures above will not damage the transmitter, but a new calibration may be necessary. *Overpressure is the pressure applied to only one of the transmitter chambers when this pressure is higher than the sensor's reading pressure limit (URL). The concept applies to differential, gauge or absolute pressure transmitters. above will not damage the transmitter, but a new calibration may be necessary.*

Pressure Limits for Flanges

WARNING
It is described here only the maximum pressures of the materials referenced in each standard, others materials on request. Temperatures above 150 °C are not available in standard models.

PRESSURES TABLE FOR SEAL AND LEVEL FLANGES DIN EN 1092-1 2008 STANDARD

Material Group	Pressure Class	Maximum Temperature Allowed						
		RT	100	150	200	250	300	350
		Maximum Pressure Allowed (bar)						
10E0 AISI 304/304L	PN 16	16	13.7	12.3	11.2	10.4	9,6	9.2
	PN 25	25	21.5	19.2	17.5	16.3	15.1	14.4
	PN 40	40	34.4	30.8	28	26	24.1	23
	PN 63	63	54.3	48.6	44.1	41.1	38.1	36.3
	PN 100	100	86.1	77.1	70	65.2	60.4	57.6
	PN 160	160	137.9	123.4	112	104.3	96.7	92.1
	PN 250	250	215.4	192.8	175	163	151.1	144

Material Group	Pressure Class	Maximum Temperature Allowed						
		RT	100	150	200	250	300	350
		Maximum Pressure Allowed (bar)						
14E0 AISI 316/316L	PN 16	16	16	14.5	13.4	12.7	11.8	11.4
	PN 25	25	25	22.7	21	19.8	18.5	17.8
	PN 40	40	40	36.3	33.7	31.8	29.7	28.5
	PN 63	63	63	57.3	53.1	50.1	46.8	45
	PN 100	100	100	90.9	84.2	79.5	74.2	71.4
	PN 160	160	160	145.5	134.8	127.2	118.8	114.2
	PN 250	250	250	227.3	210.7	198.8	185.7	178.5

Material Group	Pressure Class	Maximum Temperature Allowed						
		RT	100	150	200	250	300	350
		Maximum Pressure Allowed (bar)						
16E0 1.4410 Super Duplex 1.4462 Duplex	PN 16	16	16	16	16	16	-	-
	PN 25	25	25	25	25	25	-	-
	PN 40	40	40	40	40	40	-	-
	PN 63	63	63	63	63	63	-	-
	PN 100	100	100	100	100	100	-	-
	PN 160	160	160	160	160	160	-	-
	PN 250	250	250	250	250	250	-	-

RT: Reference Temperature (-10 to 50 ºC)

Pressure Limits for Flanges (continuation)

PRESSURES TABLE FOR SEAL AND LEVEL FLANGES ASME B16.5 2017 STANDARD

Material Group	Pressure Class	Maximum Temperature Allowed								
		-29 to 38	50	100	150	200	250	300	325	350
		Maximum Pressure Allowed (bar)								
Hastelloy C276	150	20	19.5	17.7	15.8	13.8	12.1	10.2	9.3	8.4
	300	51.7	51.7	51.5	50.3	48.3	46.3	42.9	41.4	40.3
	600	103.4	103.4	103	100.3	96.7	92.7	85.7	82.6	80.4
	1500	258.6	258.6	257.6	250.8	241.7	231.8	214.4	206.6	201.1
	2500	430.9	430.9	429.4	418.2	402.8	386.2	357.1	344.3	335.3

Material Group	Pressure Class	Maximum Temperature Allowed								
		-29 to 38	50	100	150	200	250	300	325	350
		Maximum Pressure Allowed (bar)								
S31803 Duplex S32750 Super Duplex	150	20	19.5	17.7	15.8	13.8	12.1	10.2	9.3	8.4
	300	51.7	51.7	50.7	45.9	42.7	40.5	38.9	38.2	37.6
	600	103.4	103.4	101.3	91.9	85.3	80.9	77.7	76.3	75.3
	1500	258.6	258.6	253.3	229.6	213.3	202.3	194.3	190.8	188.2
	2500	430.9	430.9	422.2	382.7	355.4	337.2	323.8	318	313.7

Material Group	Pressure Class	Maximum Temperature Allowed								
		-29 to 38	50	100	150	200	250	300	325	350
		Maximum Pressure Allowed (bar)								
AISI316L	150	15.9	15.3	13.3	12	11.2	10.5	10	9.3	8.4
	300	41.4	40	34.8	31.4	29.2	27.5	26.1	25.5	25.1
	600	82.7	80	69.6	62.8	58.3	54.9	52.1	51	50.1
	1500	206.8	200.1	173.9	157	145.8	137.3	130.3	127.4	125.4
	2500	344.7	333.5	289.9	261.6	243	228.9	217.2	212.3	208.9

Material Group	Pressure Class	Maximum Temperature Allowed								
		-29 to 38	50	100	150	200	250	300	325	350
		Maximum Pressure Allowed (bar)								
AISI316	150	19	18.4	16.2	14.8	13.7	12.1	10.2	9.3	8.4
	300	49.6	48.1	42.2	38.5	35.7	33.4	31.6	30.9	30.3
	600	99.3	96.2	84.4	77	71.3	66.8	63.2	61.8	60.7
	1500	248.2	240.6	211	192.5	178.3	166.9	158.1	154.4	151.6
	2500	413.7	400.9	351.6	320.8	297.2	278.1	263.5	257.4	252.7

Pressure Limits for Flanges (continuation)

PRESSURES TABLE FOR SEAL AND LEVEL FLANGES ASME B16.5 2017 STANDARD

Material Group	Pressure Class	Maximum Temperature Allowed								
		-29 to 38	50	100	150	200	250	300	325	350
		Maximum Pressure Allowed (bar)								
AISI304	150	19	18.3	15.7	14.2	13.2	12.1	10.2	9.3	8.4
	300	49.6	47.8	40.9	37	34.5	32.5	30.9	30.2	29.6
	600	99.3	95.6	81.7	74	69	65	61.8	60.4	59.3
	1500	248.2	239.1	204.3	185	172.4	162.4	154.6	151.1	148.1
	2500	413.7	398.5	340.4	308.4	287.3	270.7	257.6	251.9	246.9

PRESSURES TABLE FOR SEAL AND LEVEL FLANGES JIS 2220 - 2012 STANDARD

Material Group	Pressure Class	Maximum Temperature Allowed			
		Tamb 120º	220ºw	300º	350º
		Maximum Temperature Allowed (bar)			
AISI316L	10k	14	12	10	--
	20k	34	31	29	26
	40k	68	62	57	52

Pressure Limits for Sanitary Connections

PRESSURES TABLE FOR TRICLAMP CONNECTIONS BS4825 P3

DN	PN normal		HP (High pressure)	
	20ºC (68ºF)	120ºC (248ºF)	20ºC (68ºF)	120ºC (248ºF)
	Maximum Temperature Allowed (bar)			
1.1/2”	34	20	100	60
2” – DN50	28	17	70	42
3”	22	13	70	42

PRESSURES TABLE FOR THREADED CONNECTIONS

Sanitary Threads – Temperature Limits				
DN	RJT	IDF	SMS	DIN
	120ºC (248ºF)	120ºC (248ºF)	120ºC (248ºF)	120ºC (248ºF)
	BS4825 P5	**BS4825 P4**	**SMS1145**	**DIN11851**
	Maximum Temperature Allowed (bar)			
DN25	--	--	--	40
1.1/2”-DN40	10	16	40	40
2–DN50	10	16	25	25
3-DN80	10	16	25	25

Turn-on Time	**HART®:** Performs within specifications in less than 3 seconds after power is applied to the transmitter. ***Wireless*HART™:** Performs within specifications in less than 10 seconds after power is applied to the transmitter.
Humidity Limits	0 to 100% RH (Relative Humidity).
Volumetric Displacement	Less than 0.15 cm^3 (0.01 in^3).
Damping Adjustment	User configurable from 0 to 128 seconds (via digital communication or local adjustment).

Performance Specifications

Reference Conditions	Span starting at zero, temperature of 25 °C (77 °F), atmospheric pressure, power supply of 24 Vdc, Halocarbon or Silicone oil fill fluid, isolating diaphragms in 316L SST and digital trim equal to lower and upper range values.
Stability	**For ranges 2, 3, 4, 5 or 6:** High Performance: ± 0.2% of URL for 12 years Standard: ± 0.15% of URL for 7 years For ± 20 ºC temperature changes, up to 7 MPa (70 bar) of static pressure. **For range 1:** High Performance: ± 0.3% of URL for 12 years Standard: ± 0.3% of URL for 7 years For ± 20 °C temperature changes, up to 3.5 kPa (35 mbar) of static pressure. **For range 0:** High Performance: ± 0.4% of URL for 12 years Standard: ± 0.4% of URL for 7 years For ± 20 °C temperature changes, up to 100 kPa (1 bar) of static pressure. Note: Installation according to the best practices and adequate assembling for processes in which atoms of hydrogen can be generated (hydrogen migration).
Accuracy	**Standard Class:** **For range 0 and gage or differential model:** ± (0.1) % of the span, for 0.16 URL ≤ span ≤ URL; ± (0.0545 + 0.00728 * URL/span) % of the span, for 0.05 URL ≤ span ≤ 0.16 URL **For range 1 and differential or gage model:** ± (0.06) % of the span, for 0.16 URL ≤ span ≤ URL; ± (0.0364 + 0.003776 * URL/span) % of the span, for 0.025 URL ≤ span ≤ 0.16 URL **For ranges 2, 3 or 4 and differential, high static pressure or gage models:** ± (0.06) % of the span, for 0.16 URL ≤ span ≤ URL; ± (0.0364 + 0.003776 * URL/span) % of the span, for 0.025 URL ≤ span ≤ 0.16 URL; ± (0.00024 + 0.00468 * URL/span) % of the span, for 0.005 URL ≤ span ≤ 0.025 URL **For range 5 and gage or high static pressure or any sanitary model:** ± (0.065) % of the span, for 0.16 URL ≤ span ≤ URL ± (0.0326 + 0.005184 * URL/span) % of the span, for 0.025 URL ≤ span ≤ 0.16 URL; ± (0.00636 + 0.00584 * URL/span) % of the span, for 0.00833 URL ≤ span ≤ 0.025 URL

Accuracy (continuation)	**For range 6 and gage model:** ± (0.08) % of the span, for 0.16 URL ≤ span ≤ URL ± (0.0504 + 0.004736 * URL/span) % of the span, for 0.025 URL ≤ span ≤ 0.16 URL; ± (0.00304 + 0.00592 * URL/span) % of the span, for 0.00833 URL ≤ span ≤ 0.025 URL **For range 1 and absolute model:** ± [0.0667 + 0.0333 URL/span] % span **For range 2 and absolute model:** ± (0.08) % of the span, for 0.16 URL ≤ span ≤ URL; ± (0.0482 + 0.005088 * URL/span) % of the span, for 0.05 URL ≤ span ≤ 0.16 URL **For ranges 3 or 4 and absolute model:** ± (0.065) % of the span, for 0.16 URL ≤ span ≤ URL; ± (0.0326 + 0.005184 * URL/span) % of the span, for 0.025 URL ≤ span ≤ 0.16 URL; ± (0.00636 + 0.00584 * URL/span) % of the span, for 0.00833 URL ≤ span ≤ 0.025 URL **For range 5 and absolute model:** ± (0.075) % of the span, for 0.16 URL ≤ span ≤ URL; ± (0.0443 + 0.004912 * URL/span) % of the span, for 0.025 URL ≤ span ≤ 0.16 URL ± (0.00406 + 0.005918 * URL/span) % of the span, for 0.00833 URL ≤ span ≤ 0.025 URL **For range 6 and absolute model or for range 2, 3, 4 or 5 and level model:** ± (0.08) % of the span, for 0.16 URL ≤ span ≤ URL; ± (0.0504 + 0.004736 * URL/span) % of the span, for 0.025 URL ≤ span ≤ 0.16 URL; ± (0.00616 + 0.005842 * URL/span) % of the span, for 0.00833 URL ≤ span ≤ 0.025 URL **For ranges 2, 3 or 4 Inline model (G):** ± 0,06% of the span for 0,16 URL ≤ span ≤ URL: ± [0,0364 + 0,0038 URL/span] % of the span for 0,025 URL ≤ span < 0,16 URL ± [0,0015 + 0,0047 URL/span] % of the span for 0,005 URL ≤ span < 0,025 URL: **For range 5 Inline model (G):** ± 0,065 % of the span for 0,16 URL ≤ span ≤ URL: ± [0,0326 + 0,0052 URL/span] % of the span for 0,025 URL ≤ span < 0,16 URL: ± [0,01 + 0,0058 URL/span] % of the span for 0,0083 URL ≤ span < 0,025 URL: **For Insertion model:** ±0,2% of span **Performance High Class:** For range 0 and gage or differential model: ± (0.06) % of the span, for 0.16 URL ≤ span ≤ URL; ± (0.0145 + 0.00728 * URL/span) % of the span, for 0.05 URL ≤ span ≤ 0.16 URL **For range 1 and differential or gage model:** ± 0.05 % of the span, for 0.16 URL ≤ span ≤ URL; ± (0.0264 + 0.003776 * URL/span) % of the span, for 0.025 URL ≤ span ≤ 0.16 URL **For ranges 2, 3 or 4 and differential, high static pressure or gage models:** ± 0.045 % of the span, for 0.16 URL ≤ span ≤ URL; ± (0.021 + 0.00384 * URL/span) % of the span, for 0.025 URL ≤ span ≤ 0.16 URL; ± (0.0002 + 0.00436 * URL/span) % of the span, for 0.005 URL ≤ span ≤ 0.025 URL **For range 5 and gage or high static pressure:** ± (0.055) % of the span, for 0.16 URL ≤ span ≤ URL ± (0.0257 + 0.004688 * URL/span) % of the span, for 0.025 URL ≤ span ≤ 0.16 URL; ± (0.00466 + 0.005214 * URL/span) % of the span, for 0.00833 URL ≤ span ≤ 0.025 URL **For range 6 and gage model:** ± (0.075) % of the span, for 0.16 URL ≤ span ≤ URL ± (0.0454 + 0.004736 * URL/span) % of the span, for 0.025 URL ≤ span ≤ 0.16 URL; ± (0.00316 + 0.005792 * URL/span) % of the span, for 0.00833 URL ≤ span ≤ 0.025 URL **Note:** For SIS devices, please consider the standard model specifications.

Power Supply Effect	± 0.005% of calibrated span per Volt.
Vibration Effect	± 0.1% URL for field with high vibration level or pipeline with high vibration, according to IEC 60770-1 specification: 10-60 Hz, 0.21 mm peak displacement / 60-2000 Hz, 29.4 m/s^2 acceleration amplitude.
Temperature Effect	**For any model ranges 2, 3, 4, 5 or 6, except level or sanitary models:** ± (0.0795 + 0.0205 * URL/span) % of the span, per 20 oC for 0.1 URL ≤ span ≤ URL; ± (0.0345 + 0.025 * URL/span) % of the span, per 20 oC for span ≤ 0.1 URL **For any model range 1:** ± (0.08 + 0.05 * URL/span) % of the span, per 20 oC for 0.1 URL ≤ span ≤ URL; ± (0.06 + 0.052 * URL/span) % of the span, per 20 oC for span ≤ 0.1 UR **For any model range 0:** ± (0.1 + 0.1 * URL/span) % of the span, per 20 oC for 0.1 URL ≤ span ≤ URL; ± (0.05 + 0.105 * URL/span) % of the span, per 20 oC for span ≤ 0.1 URL **For any level or sanitary model:** 6 mmH2O per 20 ºC for flange 4" and DN100 17 mmH2O per 20 ºC for flange 3" and DN80 Consult for other flange dimensions and fill fluid. **For ranges 2, 3, 4 or 5 of Inline model:** ± [0.0205% URL + 0.0795% span], per 20 ºC for 0.1 URL ≤ span ≤ URL ± [0.021% URL + 0.075% span] per 20 ºC for span < 0.1 URL **Insertion Model** It depends on the insertion probe size to determine the variation by temperature. Contact Smar.
Static Pressure Effect **	**Zero Error:** **For range 5*:** ± 0.05% URL (± 0.1% for Tantalum diaphragm) per 7 MPa (1000 psi) **For range 2, 3 or 4*:** ±0.025% URL (± 0.1% for Tantalum diaphragm) per 7 MPa (1000 psi) **For range 1:** 0.05 % URL per 1.7 MPa (250 psi) **For range 0:** ± 0.1% URL per 0.5 MPa (5 bar) **For Level or Sanitary Transmitters:** ± 0.1% URL per 3.5 MPa (500 psi) The zero error is a systematic error that can be eliminated by calibrating at the operating static pressure. **Span Error:** **For ranges 2, 3, 4 or 5*:** Correctable to ± 0.1% of reading per 7 MPa (1000 psi) **For range 1:** Correctable to ± 0.1% of reading per 1.7 MPa (250 psi) **For range 0:** Correctable to ± 0.2% of reading per 0.5 MPa (5 bar) **For Level or Sanitary Transmitters:** Correctable to ± 0.1% URL per 3.5 MPa (500 psi) *Except for level or sanitary transmitters **It does not apply to LD400A, LD400M, LD400G, and LD400I models.
Mounting Position Effect	Zero shift of up to 250 Pa (1 inH_2O) which can be calibrated out. No span effect.
Electromagnetic Interference Effect	According to IEC61326-1:2006, IEC61326-2-3:2006, IEC61000-6-4:2006, IEC61000-6-2:2005

	MODEL	RANGEABILITY FOR **LD400**	RANGEABILITY FOR **LD400 SIS**
Rangeability	D0	20:1	10:1
	D1	40:1	10:1
	D2	200:1	20:1
	D3	200:1	20:1
	D4	200:1	20:1
	M0	20:1	10:1
	M1	40:1	10:1
	M2	200:1	20:1
	M3	200:1	20:1
	M4	200:1	20:1
	M5	120:1	20:1
	M6	120:1	20:1
	A0	20:1	-
	A1	4:1	4:1
	A2	20:1	10:1
	A3	120:1	20:1
	A4	120:1	20:1
	A5	120:1	20:1
	A6	120:1	-
	H2	120:1	20:1
	H3	120:1	20:1
	H4	120:1	20:1
	H5	120:1	20:1
	L2	120:1	10:1
	L3	120:1	20:1
	L4	120:1	20:1
	L5	120:1	20:1
	S2	200:1	20:1
	S3	200:1	20:1
	S4	200:1	20:1
	S5	120:1	20:1
	G2	200:1	20:1
	G3	200:1	20:1
	G4	200:1	20:1
	G5	200:1	20:1
	I2	120:1	-

Physical Specifications

Electrical Connection	**HART®** ½ - 14 NPT ¾ - 14 NPT (with 316 SST adapter for ½ - 14 NPT) M20 X 1.5 ¾ - 14 BSP (with 316 SST adapter for ½ - 14 NPT) PG 13.5 DIN ½ - 14 BSP (with 316 SST adapter for ½ - 14 NPT) ***Wireless*HART™:** Only M20 X 1.5
Process Connection	Process Connection: ¼ - 18 NPT or ½ -14 NPT (with adapter). See ordering code for more options. For level transmitters, please see ordering code.
Wetted Parts	**Sensor Isolating Diaphragms:** 316L SST, Hastelloy C276, Monel 400 or Tantalum. **Drain/Vent Valves and Plug 1/4NPT:** 316 SST, Hastelloy C276 or Monel 400. **Transmitter's Flanges (1/4 NPT) and 1/2 NPT Adapter:** Plated Carbon Steel, 316 SST (ASTM - A351 CF8M), Hastelloy C276 (ASTM - A494 CW-12MW) or Monel 400. **Wetted O'Ring (For Flanges and Adapters):** Buna-N, Viton™, PTFE or Ethylene-Propylene. **Level Flanges (LD400L – ASME / DIN / JIS)** 316L SST; 304L SST; Hastelloy C276; Duplex UNS S31803 / S32205; Super Duplex UNS S32750 / S32760 **Flanges Isolating Diaphragms** 316L SST; 304L SST; Hastelloy C276; Super Duplex UNS S32750 / S32760; 316L SST with Halar coating; 316L SST gold plated; Monel gold plated **Flange's Gaskets** PTFE; Grafoil **Sanitary connections** 316L SST (without extension) 316L SST; Hastelloy C276 (extension end of connection) **Sanitary Diaphragms** 316L SST; Hastelloy C276 **Sanitary connections - Sealing rings** Nitrile; PTFE; Viton **Insertion probe:** 316L SST/ 304L SST **Insertion Model Diaphragm:** 316L SST The **LD400** is available in NACE MR-01-75/ISO 15156 compliant materials.

Nonwetted Parts	**Electronic Housing:** Aluminum or 316 SST with polyester or epoxy painting or 316 SST without painting housing. Complies with NEMA 4X/6P, IP66 or IP66W*, IP68 or IP68W*. **The IP68 sealing test (immersion) was performed at 10m for 24 hours.* *The W condition or 4X was tested for 200h and refer to saline atmosphere.* **Absolute/Gage Flange; reduced volume flange and Plug Flange:** 316 SST (ASTM - A351 CF8M) **Fill Fluid:** Silicone, Fluorolube, Krytox, Halocarbon 4.2 or Fomblim oils. **Cover O'Ring:** Buna-N. **Mounting Bracket:** Plated Carbon Steel or 316 SST. Accessories (bolts, nuts, washers and U-clamps) in Plated Carbon Steel or 316 SST. **Flange Bolts and Nuts:** 316 SST. For NACE applications: Carbon steel B7M; Hastelloy; Super duplex **Identification Plate:** 316 SST. The **LD400** is available in NACE MR-01-75/ISO 15156 compliant materials.
Mounting	a) Flange mounting or sanitary connection for LD400L or LD400S. b) Optional universal mounting bracket for surface or vertical/horizontal 2"-pipe (DN 50). c) Manifold Valve integrated to the transmitter. d) Directly on piping for closely coupled transmitter/orifice flange combinations or LD400G.
Approximate Weights	3.15 kg (7 lb): all models with aluminum housing, except L models. 4.6 to 23.5 kg (10 lb to 52 lb): L models depending of diameter; class and material flanges and extension
Control Functions Characteristics (Optional)	Control Block (PID) and Totalization (TOT) (not available for *Wireless*HART™). *Note: The PID block isn´t available for use in SIS mode.*

MODEL	DIFFERENTIAL, FLOW, GAGE, ABSOLUTE AND HIGH STATIC PRESSURE TRANSMITTER
LD400	Smart Pressure Transmitter

COD.	Type	Range Limits Min	Range Limits Max	Range Limits Unit	Range Limits Min	Range Limits Max	Range Limits Unit	Turn Down Max
D0	Differential **(23)**	-1	1	kPa	-10	10	mbar	20
D1	Differential and Flow	-5	5	kPa	-50	50	mbar	40
D2	Differential and Flow	-50	50	kPa	-500	500	mbar	200
D3	Differential and Flow	-250	250	kPa	-2500	2500	mbar	200
D4	Differential and Flow	-2500	2500	kPa	-25	25	bar	200
M0	Gage	-1	1	kPa	-10	10	mbar	20
M1	Gage	-5	5	kPa	-50	50	mbar	40
M2	Gage	-50	50	kPa	-500	500	mbar	200
M3	Gage	-100	250	kPa	-1000	2500	mbar	200
M4	Gage	-100	2500	kPa	-1	25	bar	200
M5	Gage	-0.1	25	MPa	-1	250	bar	120
M6	Gage	-0.1	40	MPa	-1	400	bar	120
A0	Absolute	0	1	kPa	0	7,5	mmHga	20
A1	Absolute	0	5	kPa	0	37	mmHga	4
A2	Absolute	0	50	kPa	0	500	mbar	20
A3	Absolute	0	250	kPa	0	2500	mbar	120
A4	Absolute	0	2500	kPa	0	25	bar	120
A5	Absolute	0	25	MPa	0	250	bar	120
A6	Absolute	0	40	MPa	0	400	bar	120
H2	Differential - High Static Pressure	-50	50	kPa	-500	500	mbar	120
H3	Differential - High Static Pressure	-250	250	kPa	-2500	2500	mbar	120
H4	Differential - High Static Pressure	-2500	2500	kPa	-25	25	bar	120
H5	Differential - High Static Pressure	-25	25	MPa	-250	250	bar	120

Notes: The range can be extended up to 0.75 LRL* and 1.2 URL** with small degradation of accuracy.

*LRL = Lower range limit
**URL = Upper range limit

Due to differences in mechanical project, A1 range has turn-down lower than A0 range.

COD. Diaphragm Material and Fill Fluid

COD.	Material	Fill Fluid
1	316L SST	Silicone Oil **(9) (30)**
2	316L SST	Inert (Fluorolube Oil) **(2) (19) (30)**
3	Hastelloy C276	Silicone Oil **(1) (9)**
4	Hastelloy C276	Inert (Fluorolube Oil) **(1) (2) (19)**
5	Monel 400	Silicone Oil **(1) (3) (9)**
7	Tantalum	Silicone Oil **(3) (9)**
8	Tantalum	Inert (Fluorolube Oil) **(2) (3) (19)**
9	316L SST	Fomblim Oil **(12) (30)**
A	Monel 400	Fomblim Oil **(1) (3)**
D	316L SST	Inert (Krytox Oil) **(12) (19) (30)**
E	Hastelloy C276	Inert (Krytox Oil) **(1) (12) (19)**
G	Tantalum	Inert (Krytox Oil) **(3) (19)**
I	GP 316L SST - OP	Silicone Oil **(3) (9) (18)**
J	GP 316L SST - OP	Inert (Fluorolube Oil) **(3) (4) (18) (19)**
K	Monel 400	Inert (Krytox Oil) **(1) (3) (19)**
L	GP 316L SST - OP	Inert (Krytox Oil) **(3) (18) (19)**
M	GP Monel 400	Silicone Oil **(1) (3) (9)**
P	GP Monel 400	Inert (Krytox Oil) **(1) (3) (19)**
Q	316L SST	Inert (Halocarbon 4.2 Oil) **(19) (30)**
R	Hastelloy C276	Inert (Halocarbon 4.2 Oil) **(19)**
S	Tantalum	Inert (Halocarbon 4.2 Oil) **(3) (19)**
T	GP 316L SST - OP	Inert (Halocarbon Oil) **(3) (18) (19)**
U	316L SST - OP	Silicone Oil **(3) (9) (18)**
V	316L SST - OP	Inert (Fluorolube Oil) **(3) (4) (19)**
W	316L SST - OP	Inert (Krytox Oil) **(3) (19)**
X	316L SST - OP	Inert (Halocarbon Oil) **(3) (19)**

Note: GP= Gold Plated OP= Over-Lay Pot

COD. Performance Class

COD.	
0	Standard
1	High Performance **(14)**

COD. Communication Protocol

COD.		COD.	
H	HART® & 4 to 20 mA	W	*Wireless*HART™

COD. Safety Options

COD.	
0	Standard - For use in measurement and control
1	SIS (Safety Instrumented Systems) **(24)**

COD. Flange(s), Adapter(s) and Drain/Vent Valves Material

COD.	
0	Without Flanges, Adapters, and Drain/Vent Valves
P	Plated CS (Drain/Vent In) **(20)**
H	Hastelloy C276 (CW-12MW, ASTM - A494) **(1)**
I	316 SST - CF8M (ASTM A351)
F	Monel 400 Plated Bar (For HF Applications) **(1)**
1	316 SST - CF8M (ASTM A351) (Drain/Vent In Hastelloy C276) **(1)**
2	316 SST - CF8M (ASTM A351) Flange with PVDF (Kynar) Insert **(5) (7) (11)**
3	316 SST - CF8M (Drain/Vent and plug in Monel) NACE Standard

COD. Wetted O'Ring Materials

COD.	
0	Without O'Rings
B	Buna-N
E	Ethylene - Propylene
K	Kalrez **(3)**
T	Teflon
V	Viton

Note: O'Rings are not available on the sides with Remote Seals.

COD. Drain/Vent Position

COD.	
0	Without Drain/Vent
A	Drain/Vent (Opposite to Process Connection)
D	Bottom
U	Top

Note: For better drain/vent operation, vent valves are strongly recommended.
Drain/vent valve not available on the sides with remote seals.

COD. Process Connection

COD.	
0	1/4 - 18 NPT (Without Adapter)
1	1/2 - 14 NPT (With Adapter)
2	CF 16 (Without Adapter) **(29)**
3	Flange Seal with welded plug for Remote Seal **(3) (8)**
5	1/2 - 14 NPT Axial with PVDF Insert **(5) (7) (16)**
6	Flange for third party remote seal - 1/4 NPT
8	Flange for third party remote seal - Weld
9	Low Volume Flange for Remote Seal **(3) (4) (8)**
A	High Side: 1/4 NPT and Remote Seal (with plug) **(3)**
B	High Side: 1/2 - 14 NPT and Low Side: Flange with plug for Remote Seal **(10) (3)**
D	High Side: Flange with plug for Remote Seal and Low Side: 1/2 - 14 NPT **(10) (3)**
E	High Side: Remote Seal (with plug) and Low Side: 1/4 NPT **(3) (10) (12)**
F	High Side: 1/2 - 14 NPT and Low Side: Low Volume Flange for Remote Seal **(10) (3) (4)**
G	High Side: 1/4 NPT and Low Side: Remote Seal (Low Volume Flange) **(3) (4) (10) (12)**
H	High Side: Low Volume Flange for Remote Seal and Low Side: 1/2 - 14 NPT **(10) (3) (4)**
I	High Side: Remote Seal (Low Volume Flange) and Low Side: 1/4 NPT **(3) (4) (10) (12)**
Q	8 mm hole without thread (According to DIN 19213) **(13)**
T	1/2 - 14 BSP (With Adapter)
V	Manifold Valve integrated to the transmitter
Z	User's Specification

COD. Special Applications

COD.	
0	Without Special Cleaning
1	Degrease Cleaning (Oxygen, Hydrogen Peroxide or Chroline Service) **(15)**

LD400	-	D2	1	0	-	H	0	-	I	B	D	1	1

TYPICAL MODEL

LD400-D210-H0-IBD11	DIFFERENTIAL, FLOW, GAGE, ABSOLUTE AND HIGH STATIC PRESSURE TRANSMITTER

COD. Flanges Bolts and Nuts Material

COD.		COD.	
I	316 SST	A	Super Duplex Stainless Steel NACE MR0175 / MR0103 Compliant
C	Carbon Steel (ASTM A193 B7M) **(1) (19)**		
H	Hastelloy C276		

COD. Flange Thread for Fixing Accessories (Adapters, Manifolds, Mounting Brackets, etc)

COD.		COD.		COD.	
0	7/16 UNF	1	M10 X 1.5	2	M12 X 1.75

COD. Local Indicator

COD.	
0	Without Indicator
1	With Digital Indicator

COD. Electrical Connection

COD.	
0	1/2 - 14 NPT **(28)**
1	3/4 - 14 NPT (with 316 SST adapter for 1/2 - 14 NPT) **(22)**
2	3/4 - 14 BSP (with 316 SST adapter for 1/2 - 14 NPT) **(6)**
3	1/2 - 14 BSP (with 316 SST adapter for 1/2 - 14 NPT) **(6)**
A	M20 X 1.5 **(28)**
B	PG 13.5 DIN **(6)**
Z	User's Specification

COD. Plug

COD.	
I	316 SST

COD. Mounting Bracket for 2" Pipe or Surface Mounting

COD.	
0	Without bracket
1	Carbon Steel bracket and accessories **(20)**
2	316 SST bracket and accessories
5	L type, Carbon Steel bracket and accessories **(20)**
6	L type, 316 SST bracket and accessories
7	Carbon Steel bracket. Accessories: 316 SST **(20)**
9	L type, Carbon Steel bracket. Accessories: 316 SST **(20)**
A	Flat, 304 SST bracket and 316 SST accessories
Z	User's Specification

COD. Housing Material (25) (26)

COD.	
A	Aluminum (Default) (IP/TYPE)
I	316 SST - CF8M (ASTM - A351)
J	316 SST for Salines Atmospheres **(21)**
B	Aluminium for Salines Atmospheres **(21)**

COD. Painting

COD.	
0	Gray Munsell N 6,5 Polyester
8	Without Painting **(17)**
9	Safety Blue Epoxy - Electrostatic Painting
C	Safety Blue Polyester - Electrostatic Painting
Z	User´s Specification

COD. Certification Type for Hazardous Locations

COD.	
N	No Certification
I	Intrinsec Safety
E	Increased Safety
D	Explosion Proof
F	Non-incendive + Intrinsec Safety
G	Explosion Proof + Increased Safety
H	Intrinsec Safety + Explosion Proof + Increased Safety
J	Non-incendive + Intrinsec Safety + Dust Ignition

COD. Certifying Body for Hazardous Locations

COD.		COD.	
0	None	8	INMETRO (UL BR)
2	ATEX	9	IECEX
5	INMETRO (CEPEL)		

COD. Tag Plate

COD.	
0	With tag, when specified (Default)
1	Blank
2	User´s Specification

COD. HART® Configuration

COD.	
**	

LD400-D210-H0-IBD11	-	I	0	1	-	0	I	1	-	A	0	N	0	0	/	**

TYPICAL MODEL

** Fill in with HART® optional configuration (see page 28)

Notes:

(1) Meets NACE MR-01-75/ISO 15156 recommendations.
(1a) Meets NACE MR-0103
(2) Not available for absolute models nor for vacuum applications.
(3) Not available for range 0 and 1.
(4) Not recommended for vacuum service.
(5) Maximum pressure 24 bar.
(6) Options not certified for use in hazardous locations.
(7) Drain/Vent not applicable.
(8) For remote seal only 316 SST - CF8M (ASTM A351) flange is available (7/16UNF and M10x1.5)
(9) Silicone Oil is not recommended for oxygen (O_2) or Chlorine service.
(10) Only available for differential pressure transmitters.
(11) O'Ring should be Viton or Kalrez.
(12) Not available for range 0.
(13) Only available for pressure transmitters D4 or H4 and 7/16 UNF or M10 x 1.5 flang thread for fixing accessories.
(14) Only available for differential and gage models.
(15) Degrease cleaning not available for carbon steel flanges.
(16) Only available for flange with PVDF (Kynar) insert.
(17) Not available for aluminum housing.
(18) Effective for hydrogen migration process.
(19) Inert Fluid: Oxygen Compatibility, safe for oxygen service.
(20) Not applicable for saline atmosphere.
(21) IPW/TYPEX tested for 200h to according NBR 8094 / ASTM B 117 standard.
(22) Certification Ex-d for INMETRO.
(23) The D0 range should not be used for flow measurement.
(24) SIL 1 and SIL 2 (non-redundant) and SIL 3 (redundant) applications.
(25) IPX8 tested in 10 meters of water column for 24 hours.
(26) Ingress Protection:

Products	CEPEL	NEMKO / EXAM	FM
LD400	IP66/68W	IP66/68W	Type 4X/6P

(27) Not available for *Wireless*HART™ protocol.
(28) Certification Ex-d for FM / ATEX / IECEx / INMETRO.
(29) LD400A exclusive connection.
(30) Sensors in 316L stainless steel ranges 0, 1, and 2 are mounted with Hastelloy C276 diaphragm.

MODEL	FLANGED PRESSURE TRANSMITTER
LD400	Smart Pressure Transmitter

COD.	Type	Range Limits Min	Range Limits Max	Range Limits Unit	Range Limits Min	Range Limits Max	Range Limits Unit	Turn Down Max
L2	Level	-50	50	kPa	500	500	mbar	120
L3	Level	-250	250	kPa	-2500	2500	mbar	120
L4	Level	-2500	2500	kPa	-25	25	bar	120
L5	Level	-25	25	MPa	-250	250	bar	120

Note: The range can be extended up to 0.75 LRL and 1.2 URL with small degradation of accuracy. The upper range value must be limited to the flange rating.

COD. Diaphragm Material and Fill Fluid

COD.			COD.			COD.		
1	316L SST	Silicone Oil **(2) (26)**	E	Hastelloy C276	Inert (Krytox Oil) **(1) (16)**	S	Tantalum	Inert (Krytox 4.2 Oil) **(16)**
2	316L SST	Inert (Fluorolube Oil) **(3)(16)(26)**	G	Tantalum	Inert (Krytox Oil) **(16)**	T	GP 316L SST - OP	Inert (Krytox Oil) **(15) (16)**
3	Hastelloy C276	Silicone Oil **(1) (2)**	I	GP 316L SST - OP	Silicone Oil **(9) (15)**			
4	Hastelloy C276	Inert (Fluorolube Oil) **(1) (3) (16)**	J	GP 316L SST - OP	Inert (Fluorolube Oil) **(3) (15) (16)**			
5	Monel 400	Silicone Oil **(1) (2)**	K	Monel 400	Inert (Krytox Oil) **(1) (16)**			
7	Tantalum	Silicone Oil **(2)**	L	GP 316L SST - OP	Inert (Krytox Oil) **(15) (16)**			
8	Tantalum	Inert (Fluorolube Oil) **(3) (16)**	M	GP Monel 400	Silicone Oil **(1) (2)**			
9	316L SST	Fomblim Oil **(26)**	P	GP Monel 400	Inert (Krytox Oil) **(1) (16)**			
A	Monel 400	Fomblim Oil **(1)**	Q	316L SST	Inert (Krytox 4.2 Oil) **(16) (26)**			
D	316L SST	Inert (Krytox Oil) **(16) (26)**	R	Hastelloy C276	Inert (Krytox 4.2 Oil) **(1) (16)**			

Note: GP= Gold Plated OP= Over-Lay Pot

COD. Performance Class

COD.	
0	Standard

COD. Communication Protocol

COD.			
H	HART® & 4 to 20 mA	W	*Wireless*HART™

COD. Safety Options

COD.			
0	Standard – For use in measurement and control	1	SIS (Safety Instrumented Systems) **(23)**

COD. Flange(s), Adapter(s) and Drain/Vent Valves Material

COD.			
A	304L SST	F	Monel 400 Plated Bar (For HF Applications)
P	Plated CS (Drain/Vent In Stainless Steel) **(17)**	1	316 SST - CF8M (ASTM A351) (Drain/Vent In Hastelloy C276) **(1)**
H	Hastelloy C276 (CW-12MW, ASTM - A494) **(1)**	2	316 SST - CF8M (ASTM A351) Flange with PVDF (Kynar) Insert **(3) (4) (5) (6)**
I	316 SST - CF8M (ASTM A351)		

COD. O'Ring Materials

COD.			
0	Without O'Rings	K	Kalrez
B	Buna-N	T	Teflon
E	Ethylene - Propylene	V	Viton

Note: O'Rings are not available on the sides with Remote Seals.

COD. Drain/Vent Position (Low Side)

COD.	
0	Without Drain/Vent
A	Drain/Vent (Opposite to Process Connection)
D	Bottom
U	Top

Note: For better drain/vent operation, vent valves are strongly recommended. Drain/vent valve not available on the sides with remote seals

COD. Process Connection (Low Side)

COD.			
0	1/4 - 18 NPT (Without Adapter)	T	1/2 - 14 BSP (With Adapter)
1	1/2 - 14 NPT (With Adapter)	U	Flange for Level with Welded Plug
3	Remote Seal (With Plug) **(4)**	Z	User's Specification
5	1/2 - 14 NPT Axial with PVDF Insert **(3) (4)**		
9	Remote Seal (Low Volume Flange) **(3) (4)**		

COD. Special Applications

COD.	
0	No Special Cleaning
1	Degrease Cleaning (Oxygen or Chlorine Service) **(10)**
2	Vacuum Applications

COD. Flanges Bolts and Nuts Material (Low Side)

COD.			
I	316 SST	A	Super Duplex Stainless Steel NACE MR0175 / MR0103 Compliant (1a)
C	Carbon Steel (ASTM A193 B7M) **(1) (18)**		
H	Hastelloy C276		

COD. Flange Thread for Fixing Accessories (Adapters, Manifolds, Mounting Brackets, etc)

COD.	
0	7/16 UNF (Default)
1	M10 X 1.5

COD. Process Connection (High Side)

COD.			
U	1" 150 # (ANSI B16.5)	D	4" 600 # (ANSI B16.5)
V	1" 300 # (ANSI B16.5)	5	DN 25 PN10/40 (DIN EN 1092-1)
W	1" 600 # (ANSI B16.5)	R	DN 40 PN10/40 (DIN EN 1092-1)
O	1 1/2" 150 # (ANSI B16.5)	E	DN 50 PN 10/40 (DIN EN 1092-1)
P	1 1/2" 300 # (ANSI B16.5)	6	DN 80 PN 10/40 (DIN EN 1092-1)
Q	1 1/2" 600 # (ANSI B16.5)	7	DN 100 PN 10/16 (DIN EN 1092-1)
9	2" 150 # (ANSI B16.5)	8	DN 100 PN 25/40 (DIN EN 1092-1)
A	2" 300 # (ANSI B16.5)	H	10K 100A (JIS 2220)
B	2" 600 # (ANSI B16.5)	F	10K 50A (JIS 2220)
1	3" 150 # (ANSI B16.5)	G	10K 80A (JIS 2220)
2	3" 300 # (ANSI B16.5)	M	20K 100 (JIS 2220)
C	3" 600 # (ANSI B16.5)	S	20K 40A (JIS 2220)
N	3" 600 # (ANSI B16.5 RTJ)	K	20K 50A (JIS 2220)
3	4" 150 # (ANSI B16.5)	L	20K 80A (JIS 2220)
4	4" 300 # (ANSI B16.5)	Z	User's Specification

COD. Type and Flange Material (High Side)

COD.	
I	316L SST (Integral Flange)
H	Hastelloy C276 (Integral Flange)
Z	User´s Specification

COD. Flange Facing Finish

COD.	
0	Raised Face - RF
1	Flat Face - FF **(12)**
2	Ring Joint Face - RTJ **(11)**

LD400	-	L2	1	0	-	H	0	-	P	B	D	0	0	-	I	0	1	-	I	0

TYPICAL MODEL

Ordering Code (Continued)

LD400-L210-H0-PBD00-P01-10 — **FLANGED PRESSURE TRANSMITTER**

COD. Extension Length

COD.	
0	0 mm (0")
1	50 mm (2")
2	100 mm (4")
3	150 mm (6")
4	200 mm (8")
Z	User's Specification

Note: Extension Material: 316 SST

COD. Diaphragm Material (Level Tap)

COD.		COD.		COD.	
A	304L SST	T	Tantalum **(9)**	3	Tantalum with Teflon Lining
L	316L SST	X	Titanium **(9)**		
H	Hastelloy C276	1	316L SST with Teflon Lining (For 2" and 3")		
M	Monel 400	2	316L SST Gold Plated		

COD. Fill Fluid (Level Tap)

COD.		COD.	
1	DC-200/20 Silicone Oil	N	Neobee M20 Propylene Glycol Oil
2	Inert (Fluorolube MO-10 Oil) **(7) (16)**	T	Syltherm 800 Oil
3	DC704 Silicone Oil	Z	User's Specification
4	Inert (Krytox Oil) **(16)**		

COD. Local Indicator

COD.	
0	Without Local Indicator
1	With Digital Indicator

COD. Electrical Connection

COD.		COD.	
0	1/2 - 14 NPT **(20) (24)**	A	M20 X 1.5 **(20)**
1	3/4 - 14 NPT (with 316 SST adapter for 1/2 - 14 NPT) **(19) (24)**	B	PG 13.5 DIN **(8) (24)**
2	3/4 - 14 BSP (with 316 SST adapter for 1/2 - 14 NPT) **(8) (24)**	Z	User's Specification
3	1/2 - 14 BSP (with 316 SST adapter for 1/2 - 14 NPT) **(8) (24)**		

COD. Plug

COD.	
I	316 SST

COD. Housing Material (21) (22)

COD.	
A	Aluminum (IP/TYPE)
I	316 SST - CF8M (ASTM - A351) (IP/TYPE)
J	316 SST for Salines Atmospheres (IPW/TYPEX) **(18)**
B	Aluminium for Salines Atmospheres (IPW/TYPEX) **(18)**

COD. Painting

COD.	
0	Gray Munsell N 6,5 Polyester
8	Without Painting **(14)**
9	Safety Blue Epoxy - Electrostatic Painting
C	Safety Blue Polyester - Electrostatic Painting
Z	User's Specification

COD. Certification Type for Hazardous Locations

COD.		COD.	
N	No Certification	F	Non-incendive + Intrinsec Safety
I	Intrinsec Safety	G	Explosion Proof + Increased Safety
E	Increased Safety	H	Intrinsec Safety + Explosion Proof + Increased Safety
D	Explosion Proof	J	Non-incendive + Intrinsec Safety + Dust (Dust ignition)

COD. Certifying Body for Hazardous Locations

COD.		COD.	
0	None	8	INMETRO (UL BR)
2	ATEX	9	IECEX
5	INMETRO (CEPEL)		

COD. Tag Plate

COD.	
0	With tag, when specified (Default)
1	Blank
2	User's Specification

COD. Lower Housing Material

COD.		COD.	
0	Without Lower Housing Connection **(25)**	3	Super Duplex (UNS 32750) **(13)**
1	Stanless Steel 316	4	Duplex (UNS 31803) **(13)**
2	Hasteloy C276	5	Stanless Steel 304L **(13)**

COD. Gasket Material

COD.		COD.	
0	Without gasket	G	Grafoil
T	Teflon (PTFE)	I	Stanless 316 SST

COD. HART® Configuration

COD.
**

**LD400-L210-H0-PBD00-P01-I0 - 1 L 1 1 0 I - A 0 N 0 0 2 T / ** ** ← TYPICAL MODEL

** Fill in with HART® optional configuration (see page 28)

Notes:

(1) Meets NACE MR-01-75/ISO 15156 recommendations.
(1a) Meets NACE MR-0103
(2) Silicone Oil is not recommended for Oxygen (O_2) or Chlorine service.
(3) Not applicable for vacuum service.
(4) Drain/Vent not applicable.
(5) O'Ring should be Viton or Kalrez.
(6) Maximum pressure 24 bar.
(7) Fluorolube fill fluid is not available for Monel diaphragm.
(8) Options not certified for use in hazardous locations.
(9) Attention, check corrosion rate for the process, tantalum plate 0.1 mm, AISI 316L extension 3 to 6mm.
(10) Degrease cleaning not available for carbon steel flanges.
(11) Only available for flange ANSI B16.5.
(12) Not available for flange JIS 2220.
(13) For this option consult Smar.
(14) Not available for Aluminum housing.
(15) Effective for hydrogen migration process.
(16) Inert Fluid: safe for oxygen service.
(17) Not applicable for saline atmosphere.
(18) IPW/TYPEX tested for 200h to according with standard NBR 8094 / ASTM B 117.
(19) Certification Ex-d for INMETRO.
(20) Certification Ex-d for FM / ATEX / IECEx / INMETRO.
(21) IPX8 tested in 10 meters of water column for 24 hours.
(22) Ingress Protection:

Products	CEPEL	NEMKO / EXAM	FM
LD400	IP66/68W	IP66/68W	Type 4X/6P

(23) SIL 1 and SIL 2 (non-redundant) and SIL 3 (redundant) applications.
(24) Not available for *Wireless*HAR™ protocol.
(25) Supplied without Gasket.
(26) Sensors in 316L stainless steel, range 2, are mounted with Hastelloy C276 diaphragm.

Ordering Code

MODEL	PRESSURE TRANSMITTER WITH EXTENDED PROBE
LD400	Pressure Transmitter With Extended Probe

COD.	TYPE	Range Limits Min	Max	Unit
I2	Level	12,5	500	mbar

COD. Diaphragm material and Fill Fluid (Low Side)

COD.		
1	316L SST	Silicon Oil **(1) (9)**

COD. Performance Class

COD.	
0	Default

COD. Communication Protocol

COD.		COD.	
H	HART® and 4 to 20 mA	W	*Wireless*HART™

COD. Security Option

COD.	
0	Default- For use in measurement and control

COD. Probe Material / Diaphragm

COD.	
A	304L SST / 316L SST
H	304L SST / Hastelloy C276
I	316L SST / 316L SST
U	316L SST / Hastelloy C276
Z	User's Specification

COD. Probe Lenght

COD.		COD.	
1	500 mm	6	1600 mm
2	630 mm	7	2000 mm
3	800 mm	8	2500 mm
4	1000 mm	9	3200 mm
5	1250 mm	Z	User's Specification

COD. Probe Fill Fluid

COD.	
N	Propilen Glicol Oil (Neobee M20)

COD. Fixing Transmitter

COD.		COD.	
1	Support in L	4	Fixed Flanged Support
2	Adjustable Flanged Support	Z	User's Specification
3	Triclamp diameter 3"		

COD. Special Applications

COD.	
0	Without Special Aplications

COD. Local Indicator

COD.	
0	Without Local Indicator
1	With Local Indicator

COD. Electrical Connection

COD.	
0	1/2 - 14 NPT **(2)**
1	3/4- 14 NPT (With Adapter 316 SST para 1/2 - 14 NPT) **(4)**
2	3/4- 14 BSP (With Adapter 316 SST para 1/2 - 14 NPT) **(3)**
3	1/2 - 14 BSP (With Adapter 316 SST para 1/2 - 14 NPT) **(3)**
A	M20 X 1.5 **(2)**
B	PG 13.5 DIN **(3)**
Z	User's Specification

COD. Blanket Plug

COD.	
I	316 SST

COD. Housing Material (6)

COD.	
A	Aluminium
I	316 SST - CF8M (ASTM - A351)
J	316 SST - saline atmosphere **(5)**
B	Aluminium - saline atmosphere **(5)**

COD. Painting

COD.	
0	Gray Munsell N6,5 Polyesters
1	Safety Blue Epoxy – Immersion Condition-Petrobras N1021
2	Safety Blue Epoxy – Atmospheric Zone - Petrobras N1021
8	Without painting **(7)**
9	Safety Blue Epoxy - Electrostatic Painting
C	Safety Blue Polyesters - Electrostatic Painting
G	Orange Safety Epoxy
Z	Special Painting

COD. Certification Type for Hazardous Locations

COD.	
N	Without certification
I	Intrinsic Safety
E	Increased Safety
D	Explosion Proof
F	Non-incendive + Intrinsic Safety
G	Explosion Proof + Increased Safety
H	Intrinsic Safety + Explosion Proof + Increased Safety
J	Non-incendive + Intrinsic Safety + Dust

COD. Certifying Body for Hazardous Locations

COD.		COD.	
0	None	8	INMETRO (UL BR)
2	ATEX	9	IECEX
5	INMETRO (CEPEL)		

COD. Tag Plate

COD.	
0	With tag, when specified
1	Blanket
2	User's Specification

** Optional HART Configuration

LD400	-	I2	1	0	-	H	0	-	I	9	N	2	0	-	I	0	1	-	A	0	N	0	0

TYPICAL MODEL

Ordering Code (Continued)

Notes:

(1) Silicone Oil is not recommended for Oxygen (O2) or Chlorine service.
(2) Certification Ex-d for FM / ATEX / IECEx / INMETRO
(3) Options not certified for use in hazardous locations.
(4) Certification Ex-d for INMETRO.
(5) IPW/TYPEX tested for 200h to according NBR 8094 / ASTM B 117 standard.
(6) Ingress Protection:

Product	CEPEL	NEMKO / EXAM	FM
LD400	IP66/68W	IP66/68W	Type 4X/6P

(7) Not available for aluminum housing.
(8) Limited values to 4 ½ digits; limited units to 5 characters.
(9) Sensors in 316L stainless steel, range 2, are mounted with Hastelloy C276 diaphragm.

SPECIAL OPTIONS	CONTINUATION OF TRANSMITTER MAIN CODE

COD. Burn-out

COD.	
B0	Without Burn-out indication
BD	Start Scale (According NAMUR NE43 specifications)
BU	End Scale (According NAMUR NE43 specifications)

COD. LCD Indication

COD.	
Y0	Percentage (Default)
Y1	Current - I (mA)
Y2	Pressure (Engineering Unit)
Y3	Temperature (Engineering Unit)
YU	User´s specifications (8)

COD. PID Availability

COD.	
P0	PID do not available
P1	Available and disabled (Default)
P2	Available and enabled

COD. Special Characteristics

COD.	
M0	Without special characteristics (Default)
M4	Calibration with reading on the top and bottom (Hysteresis)
M5	Calibration with 10 points
M6	Special method of Acquisition disabled

COD. Diaphragm Material (High Side)

COD.	
C5	Mounting according to NACE

COD. Certification for Telecommunications

COD.	
W1	ANATEL

COD. Special

COD.	
ZZ	See notes

LD400I-210-H0-I9N20-I01-A0N00	-	4	B	1	0	-	I	1	1

TYPICAL MODEL

MODEL	SANITARY PRESSURE TRANSMITTER
LD400	Smart Pressure Transmitter

COD.	Type	Range Limits Min	Range Limits Max	Range Limits Unit	Range Limits Min	Range Limits Max	Range Limits Unit	Turn Down Max
S2	Sanitary	-50	50	kPa	-500	500	mbar	200
S3	Sanitary	-250	250	kPa	-2500	2500	mbar	200
S4	Sanitary	-2500	2500	kPa	-25	25	bar	200
S5	Sanitary	-25	25	MPa	-250	250	bar	120

Note: The range can be extended up to 0.75 LRL and 1.2 URL with small degradation of accuracy. The upper range value must be limited to the flange rating.

COD.	Diaphragm Material and Fill Fluid	
1	316L SST	Silicone Oil **(2) (19)**
2	316L SST	Inert (Fluorolube Oil) **(3) (9) (19)**
3	Hastelloy C276	Silicone Oil **(1) (2)**
4	Hastelloy C276	Inert (Fluorolube Oil) **(1) (3) (9)**

COD.	Performance Class
0	Standard

COD.	Communication Protocol		
H	HART® & 4 to 20 mA	W	*Wireless*HART™

COD.	Safety Options
0	Standard– For use in measurement and control
1	SIS (Safety Instrumented Systems) **(15)**

COD.	Flange(s), Adapter(s) and Drain/Vent Valves Material
I	316 SST

COD.	O'Ring Materials (Low Side)		
0	Without O'Rings	T	Teflon
B	Buna-N	V	Viton
E	Ethylene - Propylene		

Note: O'Rings are not available on the sides with Remote Seals.

COD.	Drain/Vent Position (Low Side)
0	Without Drain/Vent
A	Drain/Vent (Opposite to Process Connection)
D	Bottom
U	Top

Note: For better drain/vent operation, vent valves are strongly recommended. Drain/vent valve not available on the sides with remote seals.

COD.	Process Connection (Low Side)		
0	1/4 - 18 NPT (Without Adapter)	9	Remote Seal (Low Volume Flange) **(3) (4)**
1	1/2 - 14 NPT (With Adapter)	T	1/2 - 14 BSP (With Adapter)
3	Remote Seal (With Plug) **(4)**	Z	User's Specification

COD.	Special Applications
0	No Special Cleaning
1	Degrease Cleaning (Oxygen or Chlorine Service) **(6)**
2	For Vacuum Application

COD.	Flanges Bolts and Nuts Material (Low Side)		
I	316 SST	A	Super Duplex SST - According to NACE MR0175 / MR0103 (1a)
C	Carbon Steel (ASTM A193 B7M) **(1) (10)**		
H	Hastelloy C276		

COD.	Flange Thread for Fixing Accessories (Adapters)
0	7/16 UNF
1	M10 X 1.5

LD400	-	S2	1	0	H	0	-	I	B	D	1	0	-	I	0

CONTINUE IN THE NEXT PAGE

Ordering Code (Continued)

LD400-S210-H0-IBD10-P0 — **SANITARY PRESSURE TRANSMITTER**

COD. Process Connection (High Side) (18)

COD.		COD.	
8	DN25 DIN 11851 - With Extension / 316 L SST	E	Thread SMS 2" - 316 L SST
9	DN40 DIN 11851 - With Extension	M	Thread SMS 3" - With Extension
H	DN40 DIN 11851 - 316 L SST	1	Thread SMS 3" - Without Extension / 316 L SST
V	Thread DN50 DIN 11851 - With Extension	F	Tri-Clamp 1 1/2" - 316 L SST
U	Thread DN50 DIN 11851 - 316 L SST	Q	Tri-Clamp 1 1/2" HP (High Pressure) - 316 L SST
X	Thread DN80 DIN 11851 - With Extension	6	Tri-Clamp 2" - With Extension
W	Thread DN80 DIN 11851 - 316 L SST	D	Tri-Clamp 2" - 316 L SST
4	Thread IDF 2" - With Extension	N	Tri-Clamp 2" HP (High Pressure) - With Extension
B	Thread IDF 2" - 316 L SST	P	Tri-Clamp 2" HP (High Pressure) - 316 L SST
K	Thread IDF 3" - With Extension	I	Tri-Clamp 3" - With Extension
3	Thread IDF 3" - Without Extension / 316 L SST	G	Tri-Clamp 3" - 316 L SST
5	Thread RJT 2" - With Extension	J	Tri-Clamp 3" HP (High Pressure) - With Extension
C	Thread RJT 2" - 316 L SST	R	Tri-Clamp 3" HP (High Pressure) - 316 L SST
L	Thread RJT 3" - With Extension	A	TRI-CLAMP DN50 - With Extension
2	Thread RJT 3" - Without Extension / 316 L SST	O	TRI-CLAMP DN50 HP (High Pressure) - With Extension
S	Thread SMS 1 1/2" - 316 L SST	Z	User's Specification
7	Thread SMS 2" - With Extension		

COD. O-Ring Material (High Side)

COD.		COD.		COD.		COD.	
0	Without O-Ring (Supplied by customer)	B	Buna-N	T	Teflon	V	Viton	Z	User's Specification

COD. Tank Adapter

COD.		COD.		COD.	
0	Without Tank Adapter (Supplied by customer)	1	With tank, adapter in 316 SST	Z	User's Specification

COD. TRI-CLAMP

COD.		COD.		COD.	
0	Without TRI-CLAMP (Supplied by customer)	2	With TRI-CLAMP in 304 SST **(13)**	Z	User's Specification

COD. Diaphragm Material (High Side)

COD.		COD.	
I	316L SST	H	Hastelloy C276

COD. Fill Fluid (High Side)

COD.		COD.	
1	DC-200/20 Silicone Oil	N	Neobee M20 Propylene Glycol Oil
2	Inert (Fluorolube MO-10 Oil) **(3)**	Z	User's Specification
3	DC704 Silicone Oil		

COD. Local Indicator

COD.		COD.	
0	Without Indicator	1	With Digital Indicator

COD. Electrical Connection

COD.		COD.	
0	1/2 - 14 NPT **(17) (16)**	A	M20 X 1.5 **(17)**
1	3/4 - 14 NPT (with 316 SST adapter for 1/2 - 14 NPT) **(12) (16)**	B	PG 13.5 DIN **(5) (16)**
2	3/4 - 14 BSP (with 316 SST adapter for 1/2 - 14 NPT) **(5) (16)**	Z	User's Specification
3	1/2 - 14 BSP (with 316 SST adapter for 1/2 - 14 NPT) **(5) (16)**		

COD. Plug

COD.	
I	316 SST

COD. Housing Material (13) (14)

COD.		COD.	
A	Aluminum (IP/TYPE)	J	316 SST for Saline Atmospheres (IPW/TYPEX) **(18)**
I	316 SST - CF8M (ASTM - A351) (IP/TYPE)	B	Aluminium for Saline Atmospheres (IPW/TYPEX) **(18)**

COD. Painting

COD.		COD.	
0	Gray Munsell N 6,5 Polyester	C	Safety Blue Polyester - Electrostatic Painting
8	Without Painting **(8)**	Z	User's Specification
9	Safety Blue Epoxy - Electrostatic Painting		

COD. Certification Type for Hazardous Locations

COD.		COD.	
N	No Certification	F	Non-incendive + Intrinsec Safety
I	Intrinsec Safety	G	Explosion Proof + Increased Safety
E	Increased Safety	H	Intrinsec Safety + Explosion Proof + Increased Safety
D	Explosion Proof	I	Non-incendive + Intrinsec Safety + Dust (Dust ignition)

COD. Certifying Body for Hazardous Locations

COD.		COD.	
0	None	8	INMETRO (UL BR)
2	ATEX	9	IECEX
5	INMETRO (CEPEL)		

COD. Tag Plate

COD.		COD.	
0	With tag, when specified (Default)	2	User's Specification
1	Blank		

COD. HART® Configuration (Continues Next Page)

COD.
**

LD400-S210-H0-IBD10-P0	-	4	B	1	0	-	I	1	1	0	I	-	A	0	N	0	0	/	**

TYPICAL MODEL

** Fill in with HART® optional configuration (see page 28)

Notes:

(1) Meets NACE MR-01-75/ISO 15156 recommendations.
(1a) Meets MR103
(2) Silicone Oil is not recommended for Oxygen (O_2) or Chlorine service.
(3) Not applicable for vacuum service.
(4) Drain/Vent not applicable.
(5) Options not certified for use in hazardous locations.
(6) Degrease cleaning not available for carbon steel flanges.
(7) Only available for TRI-CLAMP connection.
(8) Not available for Aluminum housing.
(9) Inert Fluid: safe for oxygen service.
(10) Not applicable for saline atmosphere.
(11) IPW/TYPEX was performed in a saturated solution of NaCl 5% at 35◦C for 200 hours.
(12) Certification Ex-d for INMETRO.
(13) IPX8 tested in 10 meters of water column for 24 hours.
(14) Ingress Protection:

Products	CEPEL	NEMKO / EXAM	FM
LD400	IP66/68W	IP66/68W	Type 4X/6P

(15) SIL1 and SIL2 (non-redundant) and SIL3 (redundant).
(16) Not available for *Wireless*HART™ protocol.
(17) Certification Ex-d for FM / ATEX / IECEx / INMETRO.
(18) LD400S without extension always 316L SST/316L SST or Hastelloy C276; connections with extension, the wet tip follows 316L SST or Hastelloy C276 diaphragm material.
(19) Sensors in 316L stainless steel, range 2, are mounted with Hastelloy C276 diaphragm.

**Optional HART® Configuration [1]

MODEL	/	MAIN CODE CONTINUED (FOR HART® TRANSMITTERS)

COD. — Burn-out

COD.	
BD	Down Scale (According to NAMUR NE43 specification) (Default)
BU	Up Scale (According to NAMUR NE43 specification)

COD. — LCD1 Indication

COD.	
Y0	LCD1: Percentage (Default)
Y1	LCD1: Current - I (mA)
Y2	LCD1: Pressure (Engineering Unit)
Y3	LCD1: Temperature (Engineering Unit)
YU	LCD1: User's Specification **(2)**

COD. — LCD2 Indication

COD.	
Y0	LCD1: Percentage (Default)
Y1	LCD2: Current - I (mA)
Y2	LCD2: Pressure (Engineering Unit)
Y3	LCD2: Temperature (Engineering Unit)
YU	LCD2: User's Specification **(2)**

COD. — LCD3 Indication

COD.	
Y0	LCD1: Percentage (Default)
Y1	LCD3: Current - I (mA)
Y2	LCD3: Pressure (Engineering Unit)
Y3	LCD3: Temperature (Engineering Unit)
YU	LCD3: User's Specification **(2)**

COD. — PID Availability

COD.		COD.		COD.	
P0	PID not available	P1	Available and disabled (Default)	P2	Available and enabled

COD. — Transfer Function for Flow Measurement

COD.	
F0	**Linear (Default)**
F1	**SQRT** - Square Root. Considering the pressure input X varying between 0 and 100%, the output will be $10\sqrt{x}$. This function is used in flow measurement with, e.g., orifice or Venturi tube etc. **(3)**
F2	**SQRT**3** - Square Root of the Third Power. The output will be $0.1\sqrt{x^3}$. This function is used in open channel Flow measurement with weirs or flumes. **(3)**
F3	**SQRT**5** - Square Root of the Fifth Power. The output will be $0.001\sqrt{x^5}$. This function is used in open channel Flow measurement with V-notch weirs. **(3)**
F4	**TABLE** - The output is a curve formed by 16 points. These points may be edited directly on the XY Table of the **LD400**. For example, it may be used as a camber table for tanks in applications where the tank volume is not linear in relation to the measured pressure.
F5	**SQRT & TABLE** - Square root and Table. Same application as square roots, but also allows additional compensation of, e.g., varying Reynolds number. **(3)**
F6	**SQRT**3 & TABLE** - Square Root of the Third Power and Table. **(3)**
F7	**SQRT**5 & TABLE** - Square Root of the Fifth Power and Table. **(3)**
F8	**TABLE & SQRT** - Table and Square root. Same application as square roots, but also allows bi-directional flow measurement by correcting the inverse flow, transforming the negative flow in positive flow, via table. **(3)**

COD. — Special Features

COD.	
M0	No Special Features (Default)
M4	Calibration by increasing and decreasing the pressure (Hysteresis)
M5	10-point calibration
M6	Special acquisition disabled

COD. — Insulation Kit

COD.	
K0	Without Insulation Kit
K1	With Insulation Kit **(4)**

COD. — Special Features

COD.	
ZZ	User's Specification

MODEL	/										
LD400-D210-H0-IBD11-I01-0I1-A010	/	BU	Y2	Y3	Y1	P2	F1	M0		ZZ	← TYPICAL MODEL
LD400-L210-H0-PBD00-I01-I01-L110I-A010	/	BD	Y2	Y3	Y1	P2		M0	K1	ZZ	
LD400-S210-H0-HBDU0-I04-B10-I110I-A060	/	BD	Y2	Y3	Y1	P2		M0		ZZ	

Notes:

(1) Fill in only if selected option is different from the default value.
(2) Values limited to 4 1/2 digits; unit limited to 5 characters.
(3) Only available for differential, gage, absolute and high static pressure models.
(4) Only available for level models.

MODEL	GAGE INLINE PRESSURE TRANSMITTER
LD400	Smart Pressure Transmitter

COD.	Type	Range Limits Min	Range Limits Max	Range Limits Unit	Range Limits Min	Range Limits Max	Range Limits Unit	Turn Down Max
G2	Gage Inline	-50	50	KPa	-500	500	mbar	200
G3	Gage Inline	-100	250	KPa	-1000	2500	mbar	200
G4	Gage Inline	-100	2500	KPa	-1	25	bar	200
G5	Gage Inline	-0,1	25	MPa	-1	2500	bar	200

Note: The range can be extended up to 0.75 LRL and 1.2 URL with small degradation of accuracy. The upper range value must be limited to the flange rating.

COD. Diaphragm material and Fill Fluid (Low Side)

1	316L SST	Silicon Oil **(3) (14)**	D	316 SST L	Inert (Krytox Oil) **(2) (14)**
2	316L SST	Inert (Fluorolube Oil) **(2) (4) (14)**	E	Hastelloy C276	Inert (Krytox Oil) **(2)**
3	Hastelloy C276	Silicon Oil **(1) (3)**	Q	316 SST L	Inert (Halocarbon 4.2 Oil) **(2) (14)**
4	Hastelloy C276	Inert (Fluorolube Oil) **(1) (2) (4)**	R	Hastelloy C276	Inert (Halocarbon 4.2 Oil) **(1) (2)**

COD. Performance Class

0	Default	1	High Performance

COD. Communication Protocol

H	HART® and 4 to 20 mA	W	*Wireless*HART™

COD. Security Option

0	Default - For use in measurement and control	1	SIS - Safety Instrumented Systems **(5)**

COD. Process Connection

1	1/2 - 14 NPT - Female	U	1/2 BSP - Male
A	M20X1,5 - Male	V	Manifold Valve Integrated to the Transmitter
G	DIN EN 837-1 G1/2B Male (6)	X	1" NPT Sealed (Diaphragm 316L SST/ Fill fluid Silicone DC200/20)
H	DIN EN 837-1 G1/2B HP Male (6)	Y	1 ½ NPT Sealed (Diaphragm 316L SST/ Fill fluid Silicone DC200/20)
M	1/2 - 14 NPT - Male	Z	Special – See notes
R	Remote Seal – See notes		

COD. Process Connection Material

H	Hastelloy C276 **(1)**	I	316L SST	Z	User's Specification

COD. Special Applications

0	Without Special Aplications
1	Degrease Cleaning

COD. Local Indicator

0	Without Local Indicator	1	With Local Indicator

COD. Electrical Connection

0	1/2 - 14 NPT **(7)**
1	3/4- 14 NPT (With Adapter 316 SST para 1/2 - 14 NPT) **(8)**
2	3/4- 14 BSP (With Adapter 316 SST para 1/2 - 14 NPT) **(9)**
3	1/2 - 14 BSP (With Adapter 316 SST para 1/2 - 14 NPT) **(9)**
A	M20 X 1.5 **(7)**
B	PG 13.5 DIN **(9)**
Z	User's Specification

COD. Plug

I	316 SST

COD. Mouting Bracket

0	Without Bracket
1	Carbon steel bracket and accessories
2	316 SST bracket and accessories
7	Carbon steel bracket. Accessories: 316 SST

COD. Housing Material (12)

A	Aluminium (Default)
I	316 SST - CF8M (ASTM - A351)
J	316 SST - saline atmospheres **(10)**
B	Aluminium - saline atmospheres **(10)**

COD. Painting

0	Gray Munsell N6,5 Polyester
1	Blue Safety N4845 (1374 STANDARD – PETROBRAS)
2	Blue Safety N4845 (1735 STANDARD – PETROBRAS)
8	Without painting (11)
9	Blue Safety Epoxy – Electrostatic Painting
C	Blue Safety Polyester - Electrostatic Painting
G	Orange Safety Epoxy – Electrostatic Painting
Z	Special Painting

COD. Certification Type for Hazardous Locations

N	Without Certification
I	Intrinsic Safety
E	Increased Safety
D	Explosion Proof
F	Non-incendive + Intrinsic Safety
G	Explosion Proof + Increased Safety
H	Intrinsic Safety + Explosion Proof + Increased Safety
J	Non-incendive + Intrinsic Safety + Dust

COD. Certifying Body for Hazardous Locations

0	None	8	INMETRO (UL BR)
2	ATEX	9	IECEX
5	INMETRO (CEPEL)		

COD. Tag Plate

0	With tag, when specified
1	Blank
2	User's Specification

LD400	-	G2	1	0	-	H	0	-	1	I	0	1	-	0	I	1	-	A	0	N	0	0

TYPICAL MODE

Notes:

(1) Meets NACE MR - 01 - 75/ISO 15156 recommendations.
(2) Inert Fluid: Oxygen Compatibility, safe for oxygen service.
(3) Silicone Oil is not recommended for Oxygen (O2) or Chlorine service.
(4) Not applicable for vacuum service.
(5) SIL 1 and SIL 2 (non-redundant) and SIL 3 (redundant) applications.
(6) The DIN16288 standard was replaced by DIN EN 837-1 standard.
(7) Certification Ex-d for FM / ATEX / IECEx / INMETRO.
(8) Certification Ex-d for INMETRO.
(9) Options not certified for use in hazardous locations.
(10) IPW/TYPEX was performed in a saturated solution of NaCl 5% at 35◦C for 200 hours.
(11) Do not available for aluminum housing.
(12) Ingress Protection:

Product	CEPEL	NEMKO / EXAM	FM
LD400	IP66/68W	IP66/68W	Type 4X/6P

(13) Limited values to 4 ½ digits; limited units to 5 characters.
(14) Sensors in 316L stainless steel, range 2, are mounted with Hastelloy C276 diaphragm.

SPECIAL OPTIONS

SPECIAL OPTIONS	/	MAIN CODE OF HART TRANSMITTER (CONTINUATION)

Burn-out

COD.	
B0	Without Burn-out indication
BD	Start Scale (According NAMUR NE43 specifications)
BU	End Scale (According NAMUR NE43 specifications)

LCD Indication

COD.	
Y0	Percentage (Default)
Y1	Current (mA)
Y2	Pressure (Engineering Unit)
Y3	Temperature (Engineering Unit)
YU	User´s specification **(13)**

PID availability

COD.	
P0	PID do not available
P1	Available and disable (Default)
P2	Available and enable

Special Characteristics

COD.	
M0	Without special characteristics (Default)
M4	Calibration with reading on the top and bottom (Hysteresis)
M5	Calibration with 10 points
M6	Special method of Acquisition disabled

Special Procedure

COD.	
C5	Mounting according to NACE

Certification for Telecommunications

COD.	
W0	Without certification
W1	ANATEL

Mounting Position

COD.	
D1	Vertical
D2	Horizontal

Manufacturing Standard

COD.			
S0	SMAR	SJ	316 SST Sensor

LD400G-210-H0-1I010-I1 – A0N00	/	BU	Y2	P0	M0	*	W0	D1	S0

TYPICAL MODEL NUMBER

LD400 - Differential Pressure, Flow, Gage, Absolute and High Static Pressure Transmitter with Mounting Bracket

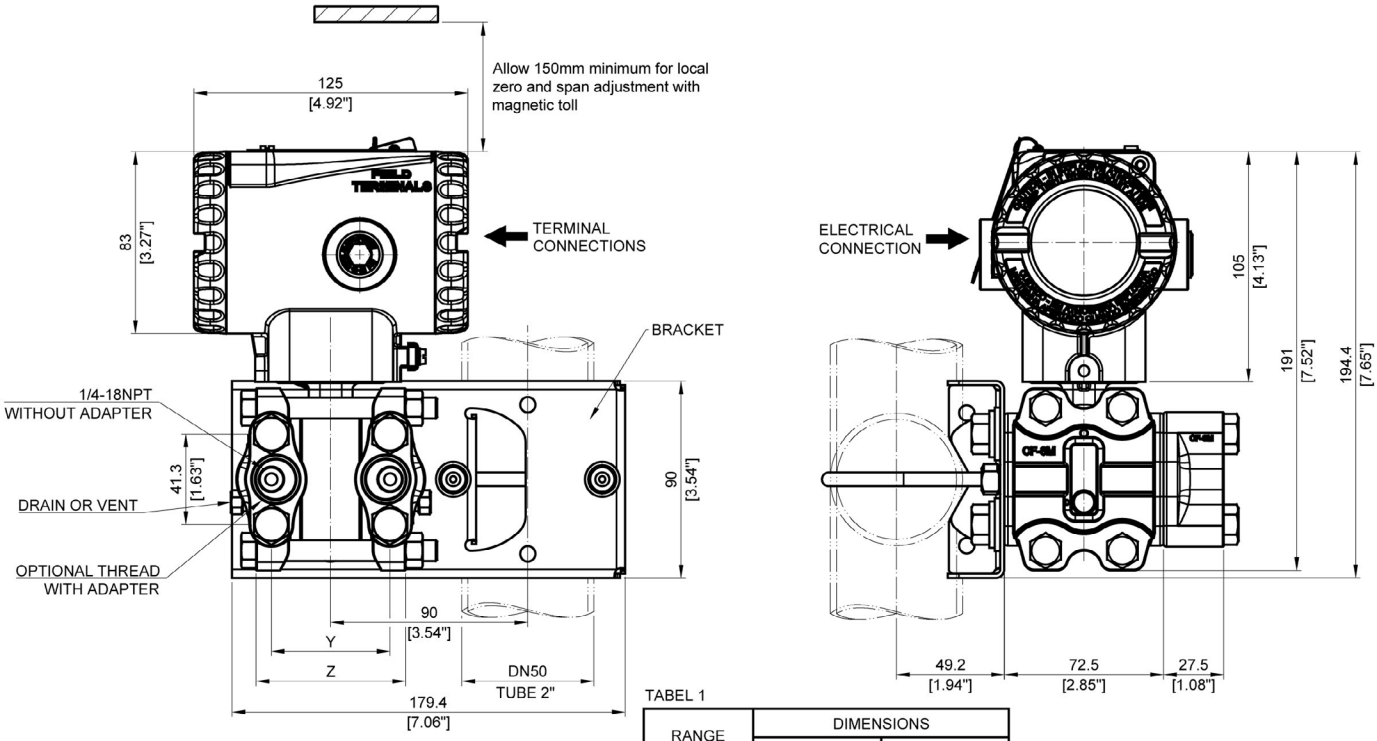

TABEL 1

RANGE	DIMENSIONS	
	Y	Z
0-1-2-3	54,0 (2.13)	69,6 (2.74)
4	56,0 (2.20)	71,6 (2.82)
5	58,3 (2.30)	73,9 (2.91)
6	58,7 (2.31)	74,3 (2.93)

LD400 - Pressure, Level, and Flow Wireless Transmitter

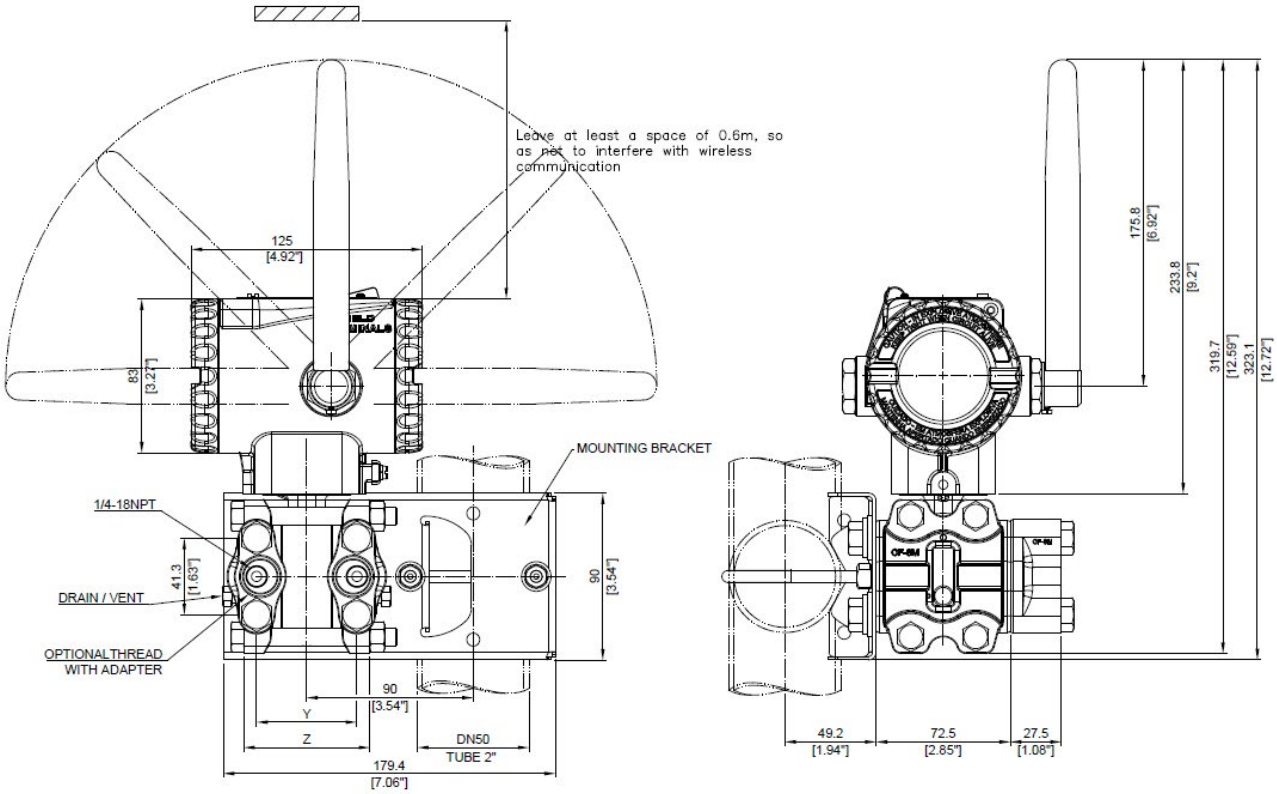

TABLE 1

RANGE	DIMENSIONS	
	Y	Z
0-1-2-3	54,0 (2.13)	69,6 (2.74)
4	56,0 (2.20)	71,6 (2.82)
5	58,3 (2.30)	73,9 (2.91)
6	58,7 (2.31)	74,3 (2.93)

LD400L - Flanged Pressure Transmitter with Integral Flange

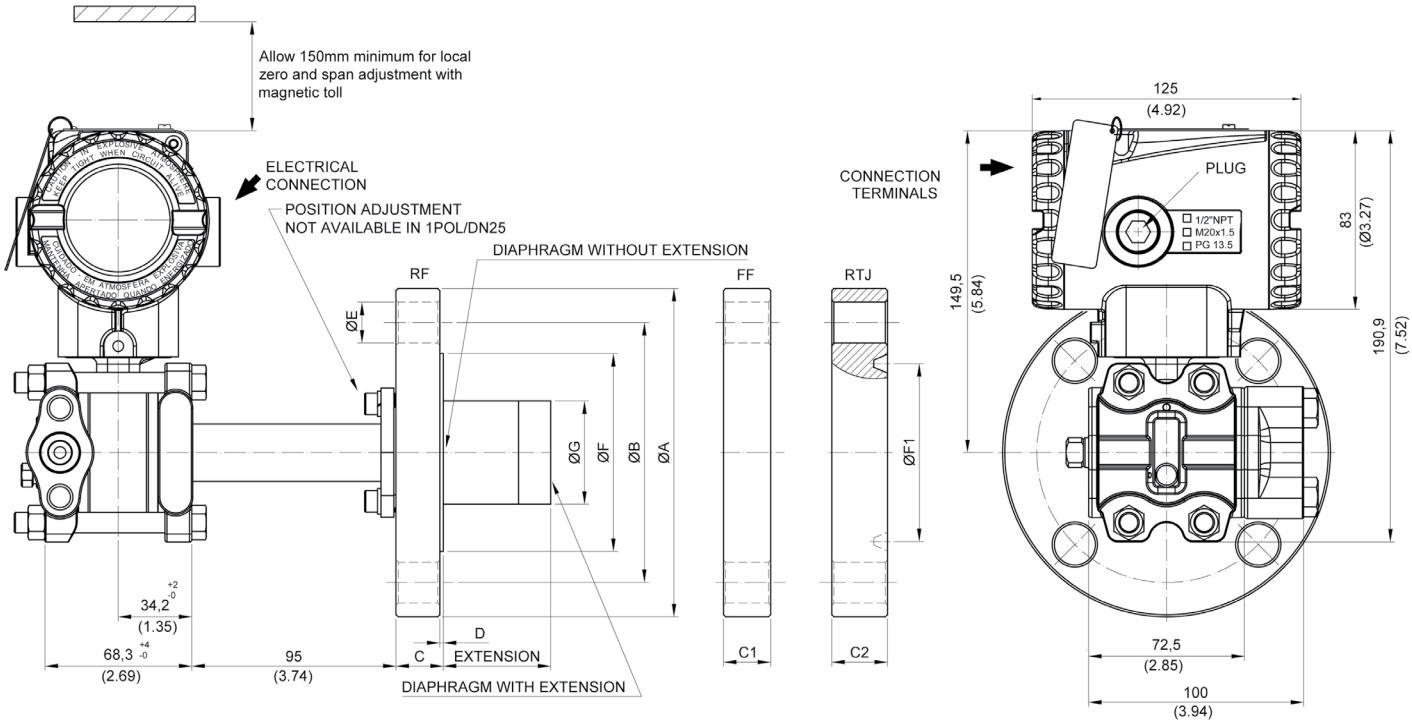

DIMENSIONS IN mm (inch)
EXTENSION LENGHTS: 0 , 50 , 100 , 150 or 200
EXTENSIONS AVAILABLE IN RF ONLY

ASME-B 16.5 - 2017 DIMENSIONS

DN	CLASS	A	B	C	C1 (FF)	C2 (RTJ)	D	E	F	F1 (RTJ)	RING	G	HOLES
1"	150	110 (4.33)	79,2 (3.12)	17 (0.67)	17 (0.67)	21 (0.83)	2 (0.06)	16 (0.63)	50,8 (2)	47,6 (1.87)	R15		4
	300	125 (4.92)	88,9 (3.50)	19 (0.75)	19 (0.75)	25 (0.98)	2 (0.06)	19 (0.75)	50,8 (2)	50,8 (2)	R16		4
	600	125 (4.92)	88,9 (3.50)	25 (0.96)		25 (0.98)	7 (0.25)	19 (0.75)	50,8 (2)	50,8 (2)	R16		4
1.1/2"	150	125 (4.92)	98,6 (3.88)	20 (0.78)	20 (0.79)	24,4 (0.96)	2 (0.06)	16 (0.63)	73,2 (2.88)	65,1 (2.56)	R19	40 (1.57)	4
	300	155 (6.10)	114,3 (4.5)	21 (0.83)	20 (0.79)	28,7 (1.13)	2 (0.06)	22 (0.87)	73,2 (2.88)	68,3 (2.68)	R20	40 (1.57)	4
	600	155 (6.10)	114,3 (4.5)	29,3 (1.15)		28,7 (1.13)	7 (0.25)	22 (0.87)	73,2 (2.88)	68,3 (2.68)	R20	40 (1.57)	4
2"	150	150 (5.90)	120,7 (4.75)	20 (0.79)	20 (0.79)	23,9 (0.94)	2 (0.06)	19 (0.75)	92 (3.62)	82,6 (3.25)	R22	48 (1.89)	4
	300	165 (6.50)	127 (5)	22,7 (0.89)	20,7 (0.81)	28,6 (1.13)	2 (0.06)	19 (0.75)	92 (3.62)	82,6 (3.25)	R23	48 (1.89)	8
	600	165 (6.50)	127 (5)	32,3 (1.27)		33,3 (1.31)	7 (0.25)	19 (0.75)	92 (3.62)	82,6 (3.25)	R23	48 (1.89)	8
3"	150	190 (7.48)	152,4 (6)	24,3 (0.96)	22,3 (0.88)	28,7 (1.13)	2 (0.06)	19 (0.75)	127 (5)	114,3 (4.5)	R29	73 (2.87)	4
	300	210 (8.27)	168,1 (6.62)	29 (1.14)	27 (1.06)	34,9 (1.37)	2 (0.06)	22 (0.87)	127 (5)	123,8 (4.87)	R31	73 (2.87)	8
	600	210 (8.27)	168,1 (6.62)	38,8 (1.53)		39,7 (1.56)	7 (0.25)	22 (0.87)	127 (5)	123,8 (4.87)	R31	73 (2.87)	8
4"	150	228,6 (9)	190,5 (7.5)	24,3 (0.96)	22,3 (0.88)	28,7 (1.13)	2 (0.06)	19 (0.75)	157 (6.19)	149,2 (5.87)	R36	89 (3.50)	8
	300	255 (10)	200 (7.87)	32,2 (1.27)	30,2 (1.19)	38,1 (1.50)	2 (0.06)	22 (0.87)	157 (6.19)	149,2 (5.87)	R37	89 (3.50)	8
	600	275 (10.83)	215,9 (8.5)	45,1 (1.77)		46 (1.81)	7 (0.25)	25 (1)	157 (6.19)	149,2 (5.87)	R37	89 (3.50)	8

EN 1092-1-2008 DIMENSIONS

DN	PN	A	B	C	C1 (FF)		D	E	F		G	HOLES
25	10/40	115 (4.53)	85 (3.35)	19 (0.75)	19 (0.75)		2 (0.08)	14 (0.55)	68 (2.67)			4
40	10/40	150 (5.91)	110 (4.33)	20 (0.78)	20 (0.78)		3 (0.12)	18 (0.71)	88 (3.46)		40 (1.57)	4
50	10/40	165 (6.50)	125 (4.92)	20 (0.78)	20 (0.78)		3 (0.12)	18 (0.71)	102 (4.01)		48 (1.89)	4
80	10/40	200 (7.87)	160 (6.3)	24 (0.95)	24 (0.95)		3 (0.12)	18 (0.71)	138 (5.43)		73 (2.87)	8
100	10/16	220 (8.67)	180 (7.08)	20 (0.78)			3 (0.12)	18 (0.71)	158 (6.22)		89 (3.50)	8
	25/40	235 (9.25)	190 (7.5)	24 (0.95)			3 (0.12)	22 (0.87)	162 (6.38)		89 (3.50)	8

JIS B 2220 DIMENSIONS

	CLASS	A	B	C		D	E	F		G	HOLES
40A	20K	140 (5.5)	105 (4.13)	20 (0.78)		2 (0.08)	19 (0.75)	81 (3.2)		40 (1.57)	4
50A	10K	155 (6.1)	120 (4.72)	20 (0.78)		2 (0.08)	15 (0.59)	96 (3.78)		48 (1.89)	4
	20K	155 (6.1)	120 (4.72)	20 (0.78)		2 (0.08)	19 (0.75)	96 (3.78)		48 (1.89)	8
	40K	165 (6.5)	130 (5.12)	26 (1.02)		2 (0.08)	19 (0.75)	105 (4.13)		48 (1.89)	8
80A	10K	185 (7.28)	150 (5.9)	22 (0.87)		2 (0.08)	19 (0.75)	126 (4.96)		73 (2.87)	8
	20K	200 (7.87)	160 (6.3)	22 (0.87)		2 (0.08)	19 (0.75)	132 (5.2)		73 (2.87)	8
100A	10K	210 (8.27)	175 (6.89)	20 (0.78)		2 (0.08)	19 (0.75)	151 (5.95)		89 (3.50)	8

LD400L - Wireless Flanged Pressure Transmitter with Integral Flange Wireless

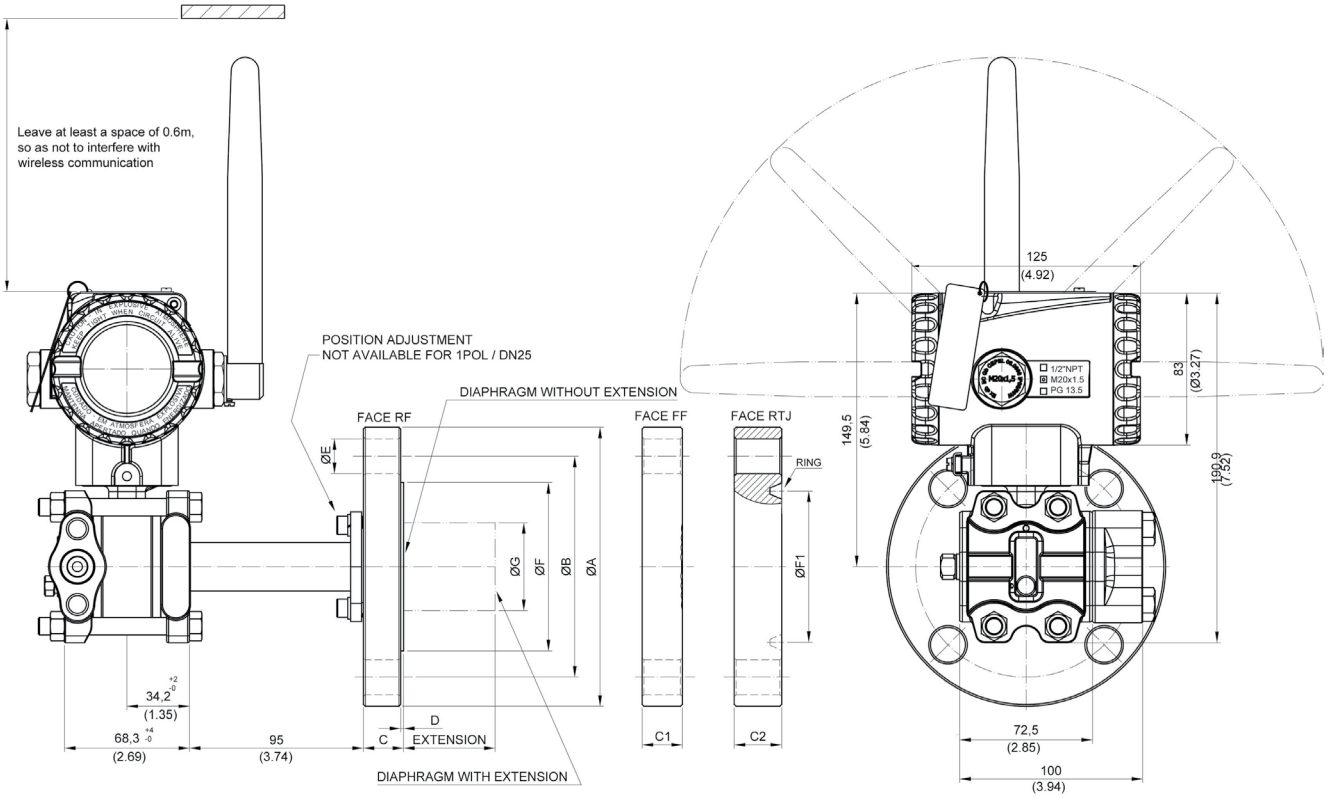

DIMENSIONS IN mm (INCH)
EXTENSION LENGHTS: 0 , 50 , 100 , 150 ou 200
ONLY AVAILABLE IN RF FLANGES

ASME-B 16.5 - 2017 DIMENSIONS

DN	CLASS	A	B	C	C1 (FF)	C2 (RTJ)	D	E	F	F1 (RTJ)	ANEL RTJ	G	N° FUROS
1"	150	110 (4.33)	79,2 (3.12)	15 (0.59)	17 (0.67)	21 (0.83)	2 (0.06)	16 (0.63)	50,8 (2)	47,6 (1.87)	R15		4
	300	125 (4.92)	88,9 (3.50)	18 (0.71)	19 (0.75)	23,9 (0.94)	2 (0.06)	19 (0.75)	50,8 (2)	50,8 (2)	R16		4
	600	125 (4.92)	88,9 (3.50)	24,5 (0.96)		23,9 (0.94)	7 (0.25)	19 (0.75)	50,8 (2)	50,8 (2)	R16		4
1.1/2"	150	125 (4.92)	98,6 (3.88)	20 (0.78)	20 (0.79)	24,4 (0.96)	2 (0.06)	16 (0.63)	73,2 (2.88)	65,1 (2.56)	R19	40 (1.57)	4
	300	155 (6.10)	114,3 (4.5)	21 (0.83)	20 (0.79)	28,7 (1.13)	2 (0.06)	22 (0.87)	73,2 (2.88)	68,3 (2.68)	R20	40 (1.57)	4
	600	155 (6.10)	114,3 (4.5)	29,3 (1.15)		28,7 (1.13)	7 (0.25)	22 (0.87)	73,2 (2.88)	68,3 (2.68)	R20	40 (1.57)	4
2"	150	150 (5.90)	120,7 (4.75)	20 (0.79)	20 (0.79)	23,9 (0.94)	2 (0.06)	19 (0.75)	92 (3.62)	82,6 (3.25)	R22	48 (1.89)	4
	300	165 (6.50)	127 (5)	22,7 (0.89)	20,7 (0.81)	28,6 (1.13)	2 (0.06)	19 (0.75)	92 (3.62)	82,6 (3.25)	R23	48 (1.89)	8
	600	165 (6.50)	127 (5)	32,3 (1.27)		33,3 (1.31)	7 (0.25)	19 (0.75)	92 (3.62)	82,6 (3.25)	R23	48 (1.89)	8
3"	150	190 (7.48)	152,4 (6)	24,3 (0.96)	22,3 (0.88)	28,7 (1.13)	2 (0.06)	19 (0.75)	127 (5)	114,3 (4.5)	R29	73 (2.87)	4
	300	210 (8.27)	168,1 (6.62)	29 (1.14)	27 (1.06)	34,9 (1.37)	2 (0.06)	22 (0.87)	127 (5)	123,8 (4.87)	R31	73 (2.87)	8
	600	210 (8.27)	168,1 (6.62)	38,8 (1.53)		39,7 (1.56)	7 (0.25)	22 (0.87)	127 (5)	123,8 (4.87)	R31	73 (2.87)	8
4"	150	228,6 (9)	190,5 (7.5)	24,3 (0.96)	22,3 (0.88)	28,7 (1.13)	2 (0.06)	19 (0.75)	157 (6.19)	149,2 (5.87)	R36	89 (3.50)	8
	300	255 (10)	200 (7.87)	32,2 (1.27)	30,2 (1.19)	38,1 (1.50)	2 (0.06)	22 (0.87)	157 (6.19)	149,2 (5.87)	R37	89 (3.50)	8
	600	275 (10.83)	215,9 (8.5)	45,1 (1.77)		46 (1.81)	7 (0.25)	25 (1)	157 (6.19)	149,2 (5.87)	R37	89 (3.50)	8

EN 1092-1-2008 DIMENSIONS

DN	PN	A	B	C	C1 (FF)		D	E	F		G	N° FUROS
25	10/40	115 (4.53)	85 (3.35)	19 (0.75)	19 (0.75)		2 (0.08)	14 (0.55)	68 (2.67)			4
40	10/40	150 (5.91)	110 (4.33)	20 (0.78)	20 (0.78)		3 (0.12)	18 (0.71)	88 (3.46)		40 (1.57)	4
50	10/40	165 (6.50)	125 (4.92)	20 (0.78)	20 (0.78)		3 (0.12)	18 (0.71)	102 (4.01)		48 (1.89)	4
80	10/40	200 (7.87)	160 (6.3)	24 (0.95)	24 (0.95)		3 (0.12)	18 (0.71)	138 (5.43)		73 (2.87)	8
100	10/16	220 (8.67)	180 (7.08)	20 (0.78)			3 (0.12)	18 (0.71)	158 (6.22)		89 (3.50)	8
	25/40	235 (9.25)	190 (7.5)	24 (0.95)			3 (0.12)	22 (0.87)	162 (6.38)		89 (3.50)	8

JIS B 2220 DIMENSIONS

	CLASS	A	B	C		D	E	F		G	N° FUROS
40A	20K	140 (5.5)	105 (4.13)	20 (0.78)		2 (0.08)	19 (0.75)	81 (3.2)		40 (1.57)	4
50A	10K	155 (6.1)	120 (4.72)	20 (0.78)		2 (0.08)	15 (0.59)	96 (3.78)		48 (1.89)	4
	20K	155 (6.1)	120 (4.72)	20 (0.78)		2 (0.08)	19 (0.75)	96 (3.78)		48 (1.89)	8
	40K	165 (6.5)	130 (5.12)	26 (1.02)		2 (0.08)	19 (0.75)	105 (4.13)		48 (1.89)	8
80A	10K	185 (7.28)	150 (5.9)	22 (0.87)		2 (0.08)	19 (0.75)	126 (4.96)		73 (2.87)	8
	20K	200 (7.87)	160 (6.3)	22 (0.87)		2 (0.08)	19 (0.75)	132 (5.2)		73 (2.87)	8
100A	10K	210 (8.27)	175 (6.89)	20 (0.78)		2 (0.08)	19 (0.75)	151 (5.95)		89 (3.50)	8

LD400L - Flanged Pressure Transmitter With Lower Housing

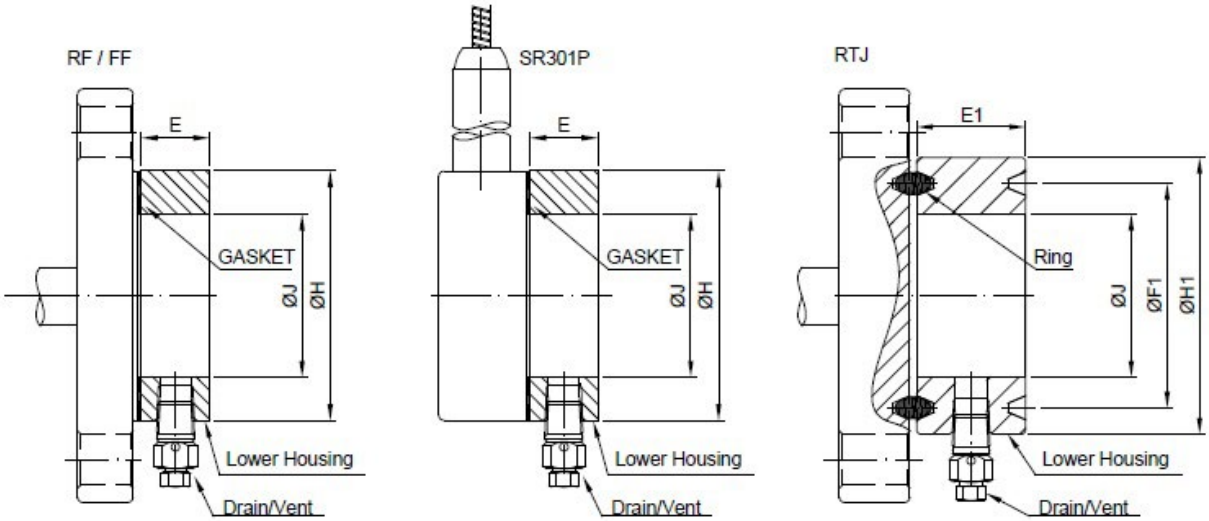

DIMENSIONS - RF / FF - mm (inch)						
STANDARD	DN	CLASS	H	J	E	
					1/4"NPT	1/2"NPT
ASME B16.5	1"	ALL	50,8 (2,00)	35 (1,38)	25	
	1.1/2"		73,2 (2,88)	48 (1,89)	25	35
	2"		91,9 (3,62)	60 (2,36)	25	35
	3"		127 (5,00)	89 (3,50)	25	35
	4"		158 (6,22)	115 (4,53)	25	35
DIN EN 1092-1	25	ALL	68 (2,68)	35 (1,38)	25	35
	40		88 (3,46)	48 (1,89)	25	35
	50		102 (4,02)	60 (2,36)	25	35
	80		138 (5,43)	89 (3,50)	25	35
	100		158 (6,22)	115 (4,53)	25	35
JIS B 2220	40A	20K	81 (3,19)	48 (1,89)	25	35
	50A	10K	96 (3,78)	60 (1,36)	25	35
		40K	105 (4,13)	60 (1,36)	25	35
	80A	10K	126 (4,96)	89 (3,50)	25	35
		20K	132 (5,20)	89 (3,50)	25	35
	100A	10K	151 (5,94)	115 (4,53)	25	35

DIMENSIONS - RTJ - mm (inch) - ASME B16.5							
DN	CLASS	F1	RING	H1	J	E1	
						1/4"NPT	1/2"NPT
1"	150	47,6 (1,87)	R15	63,5 (2,50)	35 (1,38)	40	45
	300	50,8 (2,00)	R16	70 (2,75)	35 (1,38)	40	45
	600	50,8 (2,00)	R16	70 (2,75)	35 (1,38)	40	45
	1500	50,8 (2,00)	R16	71,5 (2,81)	35 (1,38)	40	45
	2500	60,3 (2,37)	R18	73 (2,88)	35 (1,38)	40	45
1.1/2"	150	65,1 (2,56)	R19	82,5 (3,25)	48 (1,89)	40	45
	300	68,3 (2,69)	R20	90,5 (3,56)	48 (1,89)	40	45
	600	68,3 (2,69)	R20	90,5 (3,56)	48 (1,89)	40	45
	1500	68,3 (2,69)	R20	92 (3,62)	48 (1,89)	40	45
	2500	82,6 (3,25)	R23	114 (4,50)	48 (1,89)	40	45
2"	150	82,6 (3,25)	R22	102 (4,00)	60 (2,36)	40	45
	300	82,6 (3,25)	R23	108 (4,25)	60 (2,36)	40	45
	600	82,6 (3,25)	R23	108 (4,25)	60 (2,36)	40	45
	1500	95,3 (3,75)	R24	124 (4,88)	60 (2,36)	40	45
	2500	101,6 (4,00)	R26	133 (5,25)	60 (2,36)	40	45
3"	150	114,3 (4,50)	R29	133 (5,25)	89 (3,50)	40	45
	300	123,8 (4,87)	R31	146 (5,75)	89 (3,50)	40	45
	600	123,8 (4,87)	R31	146 (5,75)	89 (3,50)	40	45
4"	150	149,2 (5,87)	R36	171 (6,75)	115 (4,53)	40	45
	300	149,2 (5,87)	R37	175 (6,88)	115 (4,53)	40	45
	600	149,2 (5,87)	R37	175 (6,88)	115 (4,53)	40	45

LOWER HOUSING 1/2NPT SUPPLIED WITH PLASTIC PROTECTION
NOT LOWER HOUSING 1/2 NPT FOR 1 INCH

LD400S - Sanitary Transmitter With Extension

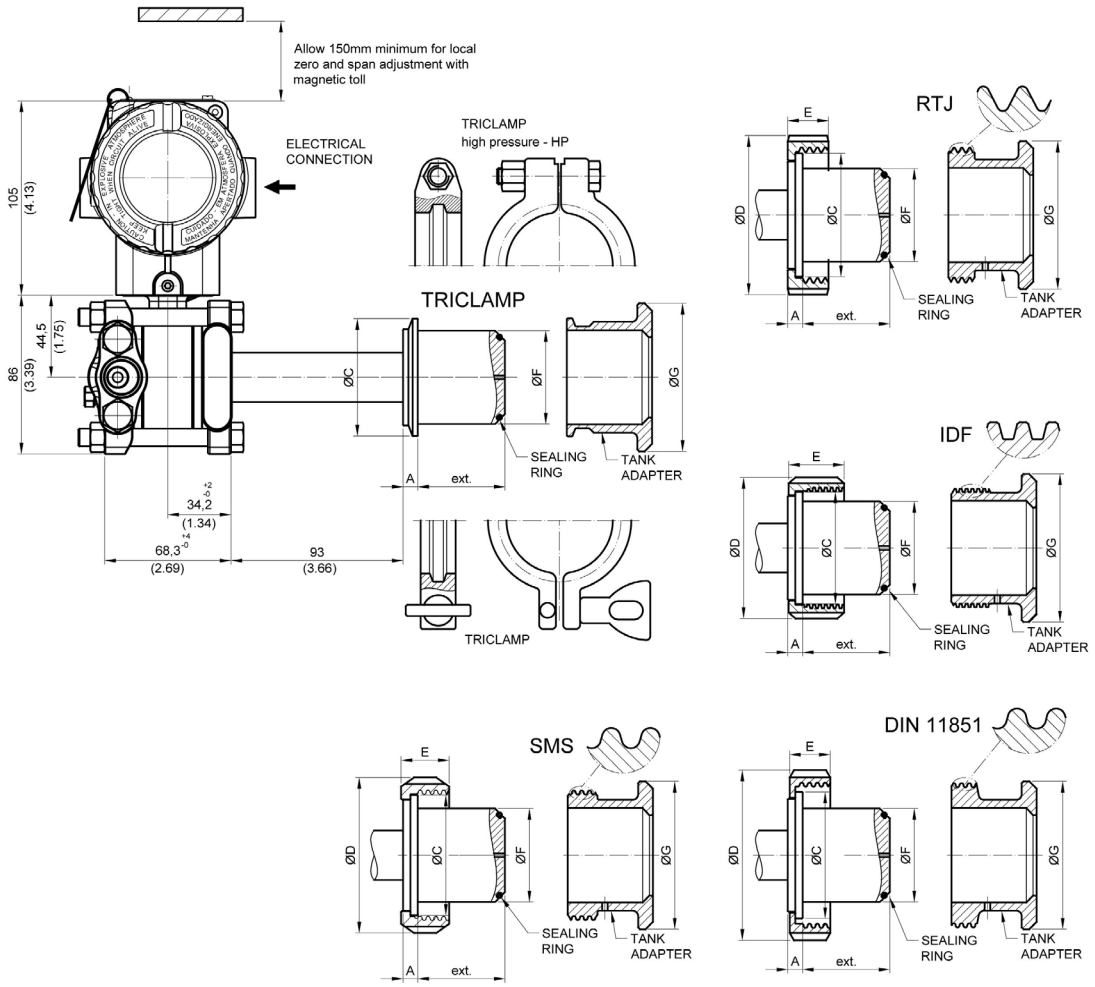

SR301S / LD30XS / LD400S							
CONNECTIONS WITH EXTENSION	Dimensions in mm (inch)						
	A	ØC	ØD	E	ØF	ØG	EXT.
Tri-Clamp DN50 - with extension	8 (0.315)	64 (2.52)	---	---	50,5 (1.99)	80 (3.15)	48 (1.89)
Tri-Clamp DN50 HP - with extension	8 (0.315)	64 (2.52)	---	---	50,5 (1.99)	80 (3.15)	48 (1.89)
Tri-Clamp - 2" - with extension	8 (0.315)	64 (2.52)	---	---	50,5 (1.99)	80 (3.15)	48 (1.89)
Tri-Clamp - 2" HP -with extension	8 (0.315)	64 (2.52)	---	---	50,5 (1.99)	80 (3.15)	48 (1.89)
Tri-Clamp - 3" - with extension	8 (0.315)	91 (3.58)	---	---	72,5 (2.85)	100 (3.94)	50 (1.96)
Tri-Clamp - 3" HP - with extension	8 (0.315)	91 (3.58)	---	---	72,5 (2.85)	100 (3.94)	50 (1.96)
Thread DN25 - DIN 11851 - with extension	6 (0.24)	47,5 (1.87)	63 (2.48)	21 (0.83)	43,2 (1.7)	80 (3.15)	26,3 (1.03)
Thread DN40 - DIN 11851 - with extension	8 (0.315)	56 (2.2)	78 (3.07)	21 (0.83)	50,5 (1.99)	80 (3.15)	48 (1.89)
Thread DN50 - DIN 11851 - with extension	8 (0.315)	68,5 (2.7)	92 (3.62)	22 (0.86)	50,5 (1.99)	80 (3.15)	48 (1.89)
Thread DN80 - DIN 11851 - with extension	8 (0.315)	100 (3.94)	127 (5)	29 (1.14)	72,5 (2.85)	100 (3.94)	50 (1.96)
Thread SMS - 2" - with extension	8 (0.315)	65 (2.56)	84 (3.3)	26 (1.02)	50,5 (1.99)	80 (3.15)	48 (1.89)
Thread SMS - 3" - with extension	8 (0.315)	93 (3.66)	113 (4.45)	32 (1.26)	72,5 (2.85)	100 (3.94)	50 (1.96)
Thread RJT - 2" - with extension	8 (0.315)	66,7 (2.63)	86 (3.38)	22 (0.86)	50,5 (1.99)	80 (3.15)	48 (1.89)
Thread RJT - 3" - with extension	8 (0.315)	92 (3.62)	112 (4.41)	22,2 (0.87)	72,5 (2.85)	100 (3.94)	50 (1.96)
Thread IDF - 2" - with extension	8 (0.315)	60.5 (2.38)	76,2 (3)	30 (1.18)	50,5 (1.99)	80 (3.15)	48 (1.89)
Thread IDF - 3" - with extension	8 (0.315)	87,5 (3.44)	101,6 (4)	30 (1.18)	72,5 (2.85)	100 (3.94)	50 (1.96)

LD400S - Wireless Sanitary Transmitter With Extension

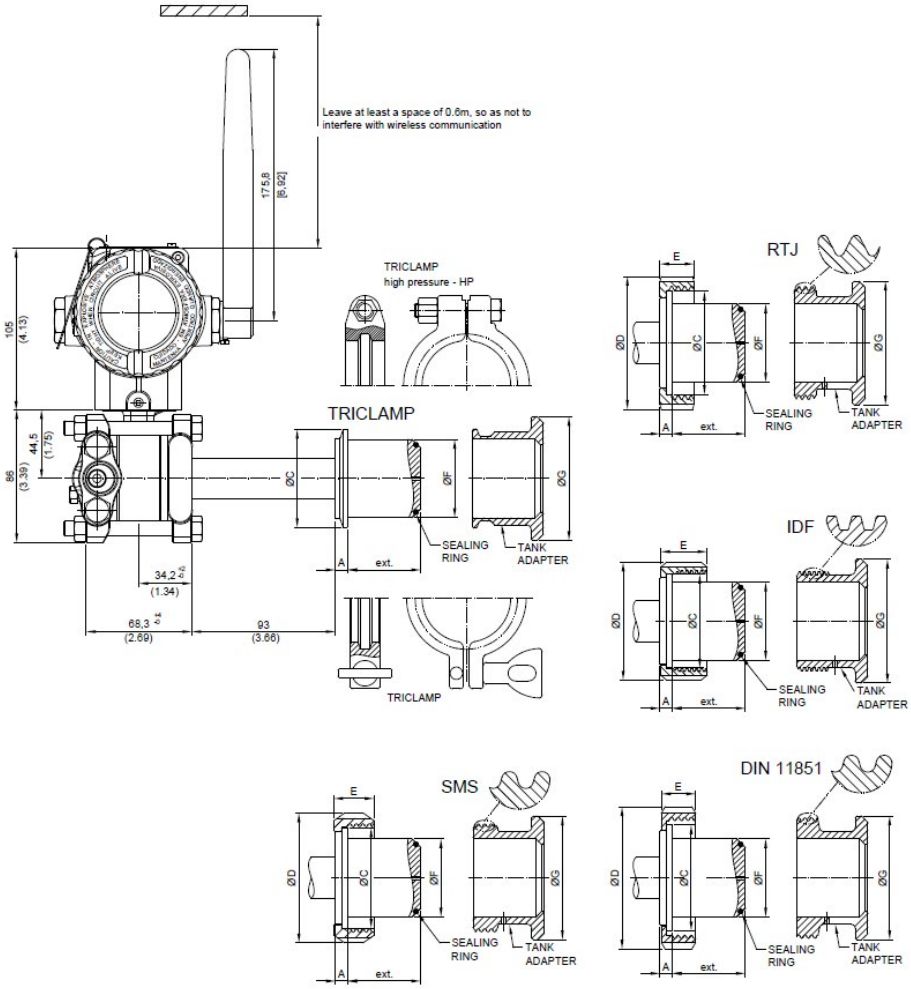

SR301S / LD30XS / LD400S							
CONNECTIONS WITH EXTENSION	Dimensions in mm (inch)						
	A	ØC	ØD	E	ØF	ØG	EXT.
Tri-Clamp DN50 - with extension	8 (0.315)	64 (2.52)	---	---	50,5 (1.99)	80 (3.15)	48 (1.89)
Tri-Clamp DN50 HP - with extension	8 (0.315)	64 (2.52)	---	---	50,5 (1.99)	80 (3.15)	48 (1.89)
Tri-Clamp - 2" - with extension	8 (0.315)	64 (2.52)	---	---	50,5 (1.99)	80 (3.15)	48 (1.89)
Tri-Clamp - 2" HP -with extension	8 (0.315)	64 (2.52)	---	---	50,5 (1.99)	80 (3.15)	48 (1.89)
Tri-Clamp - 3" - with extension	8 (0.315)	91 (3.58)	---	---	72,5 (2.85)	100 (3.94)	50 (1.96)
Tri-Clamp - 3" HP - with extension	8 (0.315)	91 (3.58)	---	---	72,5 (2.85)	100 (3.94)	50 (1.96)
Thread DN25 - DIN 11851 - with extension	6 (0.24)	47,5 (1.87)	63 (2.48)	21 (0.83)	43,2 (1.7)	80 (3.15)	26,3 (1.03)
Thread DN40 - DIN 11851 - with extension	8 (0.315)	56 (2.2)	78 (3.07)	21 (0.83)	50,5 (1.99)	80 (3.15)	48 (1.89)
Thread DN50 - DIN 11851 - with extension	8 (0.315)	68,5 (2.7)	92 (3.62)	22 (0.86)	50,5 (1.99)	80 (3.15)	48 (1.89)
Thread DN80 - DIN 11851 - with extension	8 (0.315)	100 (3.94)	127 (5)	29 (1.14)	72,5 (2.85)	100 (3.94)	50 (1.96)
Thread SMS - 2" - with extension	8 (0.315)	65 (2.56)	84 (3.3)	26 (1.02)	50,5 (1.99)	80 (3.15)	48 (1.89)
Thread SMS - 3" - with extension	8 (0.315)	93 (3.66)	113 (4.45)	32 (1.26)	72,5 (2.85)	100 (3.94)	50 (1.96)
Thread RJT - 2" - with extension	8 (0.315)	66,7 (2.63)	86 (3.38)	22 (0.86)	50,5 (1.99)	80 (3.15)	48 (1.89)
Thread RJT - 3" - with extension	8 (0.315)	92 (3.62)	112 (4.41)	22,2 (0.87)	72,5 (2.85)	100 (3.94)	50 (1.96)
Thread IDF - 2" - with extension	8 (0.315)	60.5 (2.38)	76,2 (3)	30 (1.18)	50,5 (1.99)	80 (3.15)	48 (1.89)
Thread IDF - 3" - with extension	8 (0.315)	87,5 (3.44)	101,6 (4)	30 (1.18)	72,5 (2.85)	100 (3.94)	50 (1.96)

LD400S - Sanitary Transmitter Without Extension

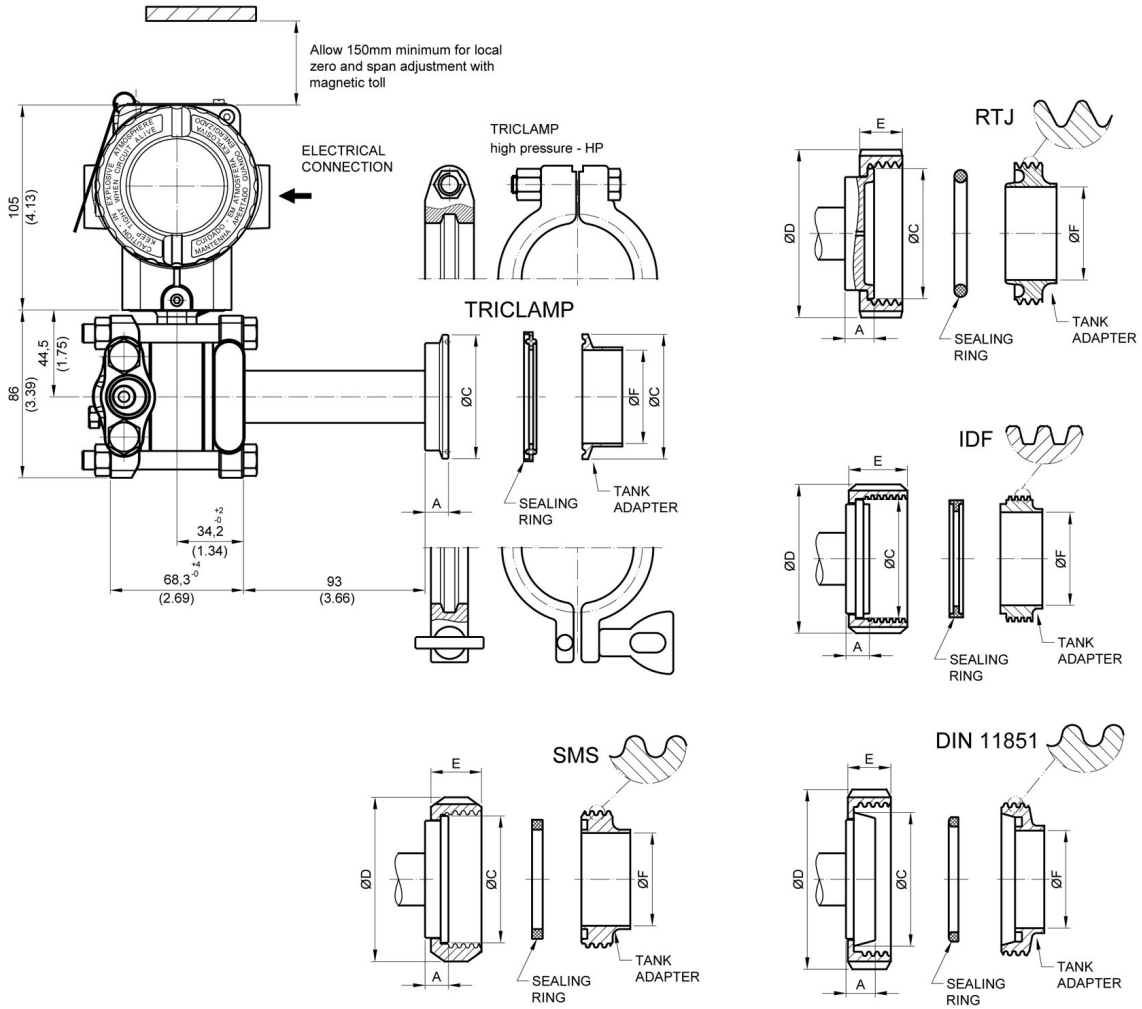

SR301S / LD30xS / LD400S							
CONNECTIONS WITHOUT EXTENSION	Dimensions in mm (inch)						
	A	ØC	ØD	E	ØF	ØG	EXT.
Tri-Clamp - 1 1/2" - without extension	12 (0.47)	50 (1.96)	---	---	35 (1.38)	---	---
Tri-Clamp - 1 1/2" HP - without extension	12 (0.47)	50 (1.96)	---	---	35 (1.38)	---	---
Tri-Clamp - 2" - without extension	12 (0.47)	63,5 (2.5)	---	---	47,6 (1.87)	---	---
Tri-Clamp - 2" HP - without extension	12 (0.47)	63,5 (2.5)	---	---	47,6 (1.87)	---	---
Tri-Clamp - 3" - without extension	12 (0.47)	91 (3.58)	---	---	72 (2.83)	---	---
Tri-Clamp - 3" HP - without extension	12 (0.47)	91 (3.58)	---	---	72 (2.83)	---	---
Thread DN40 - DIN 11851 - without extension	13 (0.51)	56 (2.2)	78 (3.07)	21 (0.83)	38 (1.5)	---	---
Thread DN50 - DIN 11851 - without extension	15 (0.59)	68,5 (2.7)	92 (3.62)	22 (0.86)	50 (1.96)	---	---
Thread DN80 - DIN 11851 - without extension	16 (0.63)	100 (3.94)	127 (5)	29 (1.14)	81 (3.19)	---	---
Thread SMS - 1 1/2" - without extension	12 (0.47)	55 (2.16)	74 (2.91)	25 (0.98)	35 (1.38)	---	---
Thread SMS - 2" - without extension	12 (0.47)	65 (2.56)	84 (3.3)	26 (1.02)	48,6 (1.91)	---	---
Thread SMS - 3" - without extension	12 (0.47)	93 (3.66)	113 (4.45)	32 (1.26)	73 (2.87)	---	---
Thread RJT - 2" - without extension	15 (0.59)	66,7 (2.63)	86 (3.38)	22 (0.86)	47,6 (1.87)	---	---
Thread RJT - 3" - without extension	15 (0.59)	92 (3.62)	112 (4.41)	22,2 (0.87)	73 (2.87)	---	---
Thread IDF - 2" - without extension	12 (0.47)	60.5 (2.38)	76 (2.99)	30 (1.18)	47,6 (1.87)	---	---
Thread IDF - 3" - without extension	12 (0.47)	87,5 (3.44)	101,6 (4)	30 (1.18)	73 (2.87)	---	---

LD400S - Wireless Sanitary Transmitter Without Extension

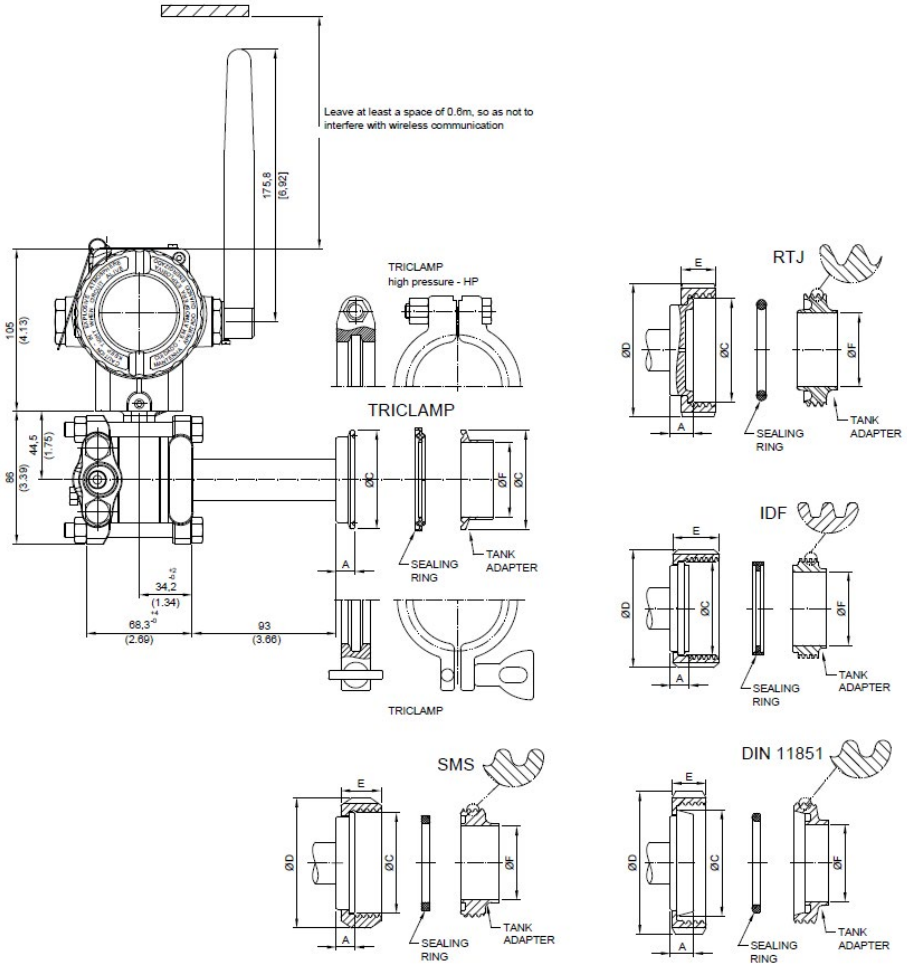

SR301S / LD30xS / LD400S							
CONNECTIONS WITHOUT EXTENSION	Dimensions in mm (inch)						
	A	ØC	ØD	E	ØF	ØG	EXT.
Tri-Clamp - 1 1/2" - without extension	12 (0.47)	50 (1.96)	---	---	35 (1.38)	---	---
Tri-Clamp - 1 1/2" HP - without extension	12 (0.47)	50 (1.96)	---	---	35 (1.38)	---	---
Tri-Clamp - 2" - without extension	12 (0.47)	63,5 (2.5)	---	---	47,6 (1.87)	---	---
Tri-Clamp - 2" HP - without extension	12 (0.47)	63,5 (2.5)	---	---	47,6 (1.87)	---	---
Tri-Clamp - 3" - without extension	12 (0.47)	91 (3.58)	---	---	72 (2.83)	---	---
Tri-Clamp - 3" HP - without extension	12 (0.47)	91 (3.58)	---	---	72 (2.83)	---	---
Thread DN40 - DIN 11851 - without extension	13 (0.51)	56 (2.2)	78 (3.07)	21 (0.83)	38 (1.5)	---	---
Thread DN50 - DIN 11851 - without extension	15 (0.59)	68,5 (2.7)	92 (3.62)	22 (0.86)	50 (1.96)	---	---
Thread DN80 - DIN 11851 - without extension	16 (0.63)	100 (3.94)	127 (5)	29 (1.14)	81 (3.19)	---	---
Thread SMS - 1 1/2" - without extension	12 (0.47)	55 (2.16)	74 (2.91)	25 (0.98)	35 (1.38)	---	---
Thread SMS - 2" - without extension	12 (0.47)	65 (2.56)	84 (3.3)	26 (1.02)	48,6 (1.91)	---	---
Thread SMS - 3" - without extension	12 (0.47)	93 (3.66)	113 (4.45)	32 (1.26)	73 (2.87)	---	---
Thread RJT - 2" - without extension	15 (0.59)	66,7 (2.63)	86 (3.38)	22 (0.86)	47,6 (1.87)	---	---
Thread RJT - 3" - without extension	15 (0.59)	92 (3.62)	112 (4.41)	22,2 (0.87)	73 (2.87)	---	---
Thread IDF - 2" - without extension	12 (0.47)	60.5 (2.38)	76 (2.99)	30 (1.18)	47,6 (1.87)	---	---
Thread IDF - 3" - without extension	12 (0.47)	87,5 (3.44)	101,6 (4)	30 (1.18)	73 (2.87)	---	---

LD400G - Gage Inline Pressure Transmitter

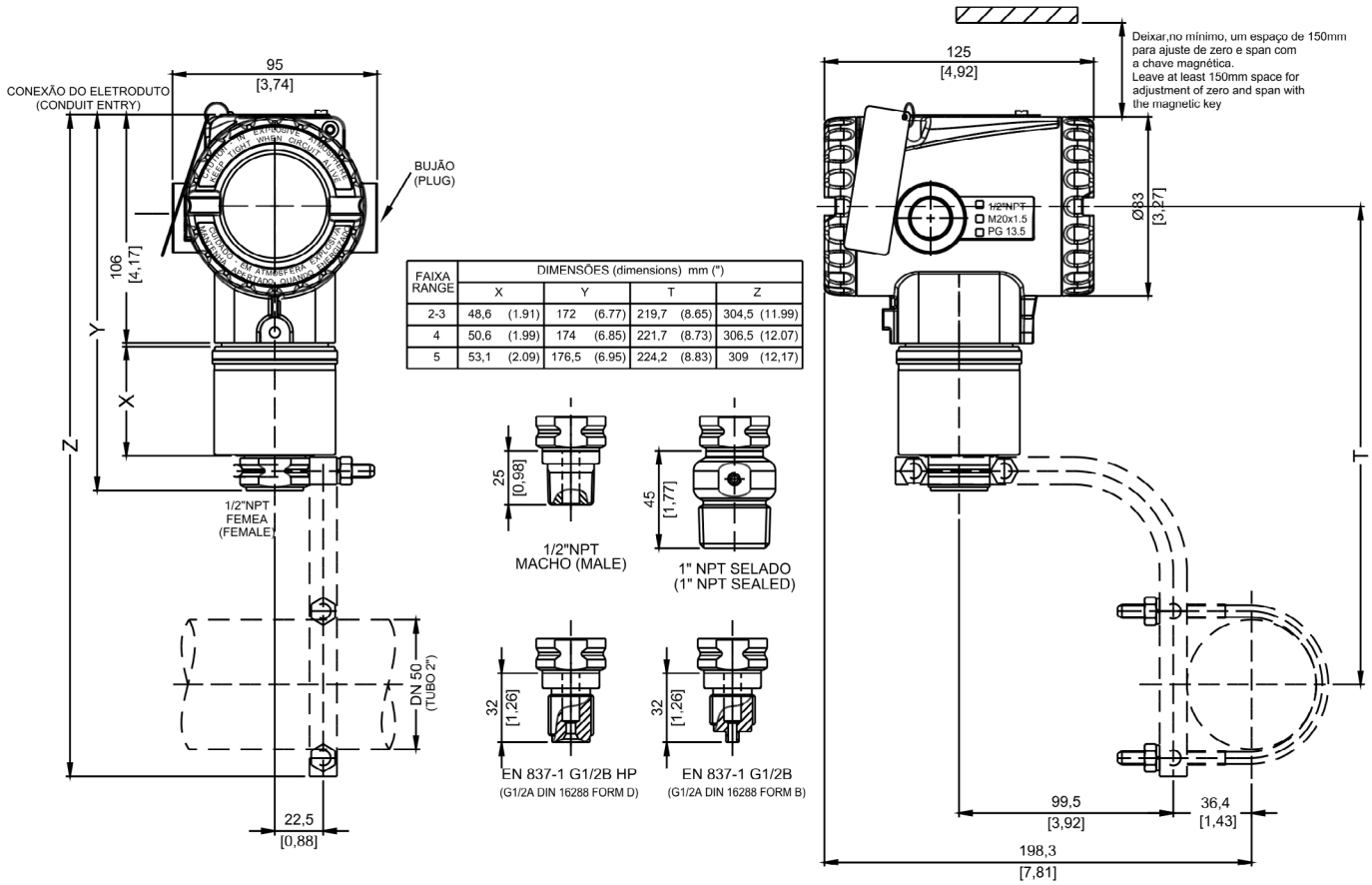

FAIXA RANGE	DIMENSÕES (dimensions) mm (")			
	X	Y	T	Z
2-3	48,6 (1.91)	172 (6.77)	219,7 (8.65)	304,5 (11.99)
4	50,6 (1.99)	174 (6.85)	221,7 (8.73)	306,5 (12.07)
5	53,1 (2.09)	176,5 (6.95)	224,2 (8.83)	309 (12,17)

LD400G - Wireless Gage Inline Pressure Transmitter

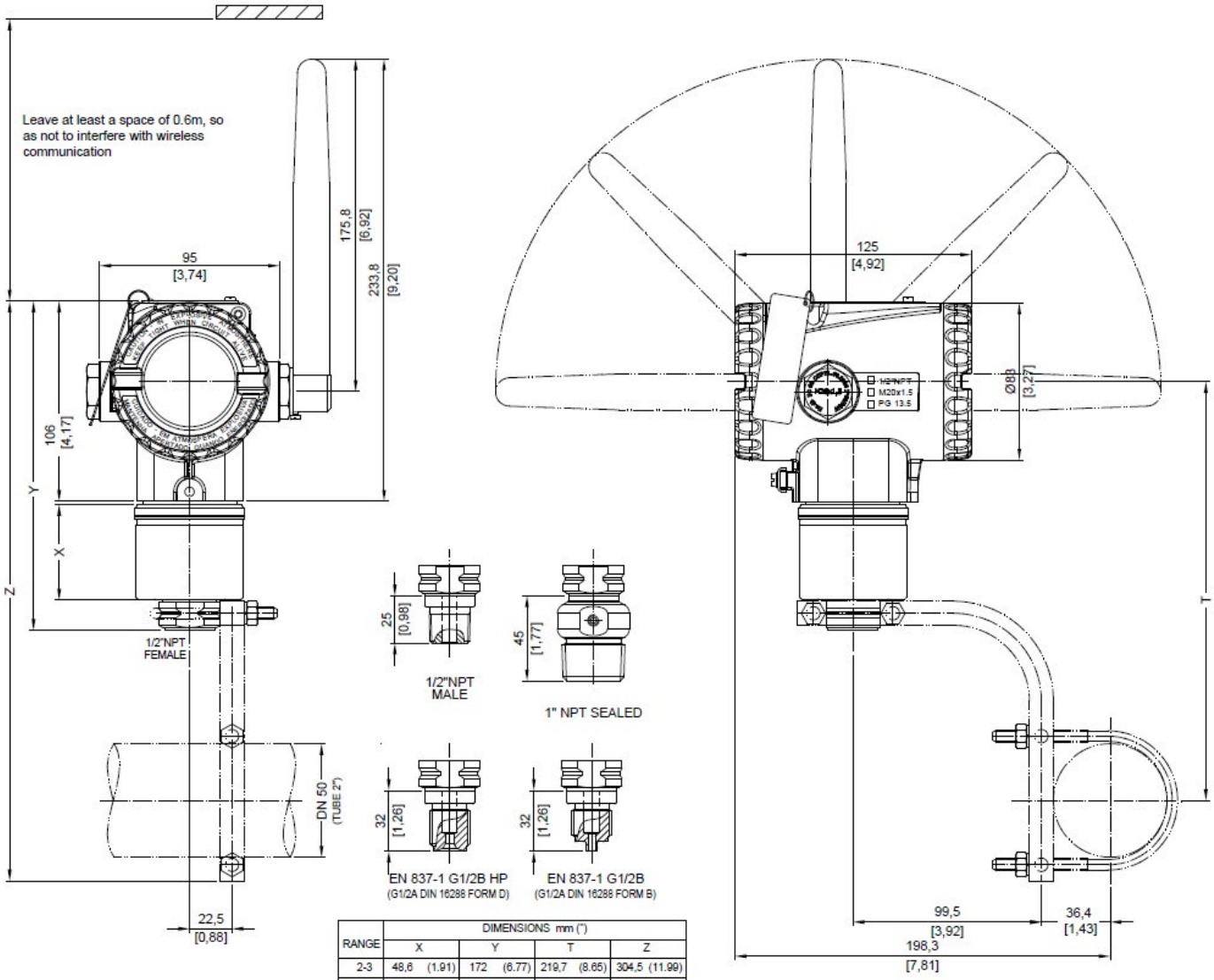

RANGE	DIMENSIONS mm (")							
	X		Y		T		Z	
2-3	48,6	(1.91)	172	(6.77)	219,7	(8.65)	304,5	(11.99)
4	50,6	(1.99)	174	(6.85)	221,7	(8.73)	306,5	(12.07)
5	53,1	(2.09)	176,5	(6.95)	224,2	(8.83)	309	(12,17)

LD400I - Pressure Transmitter with Extended Probe

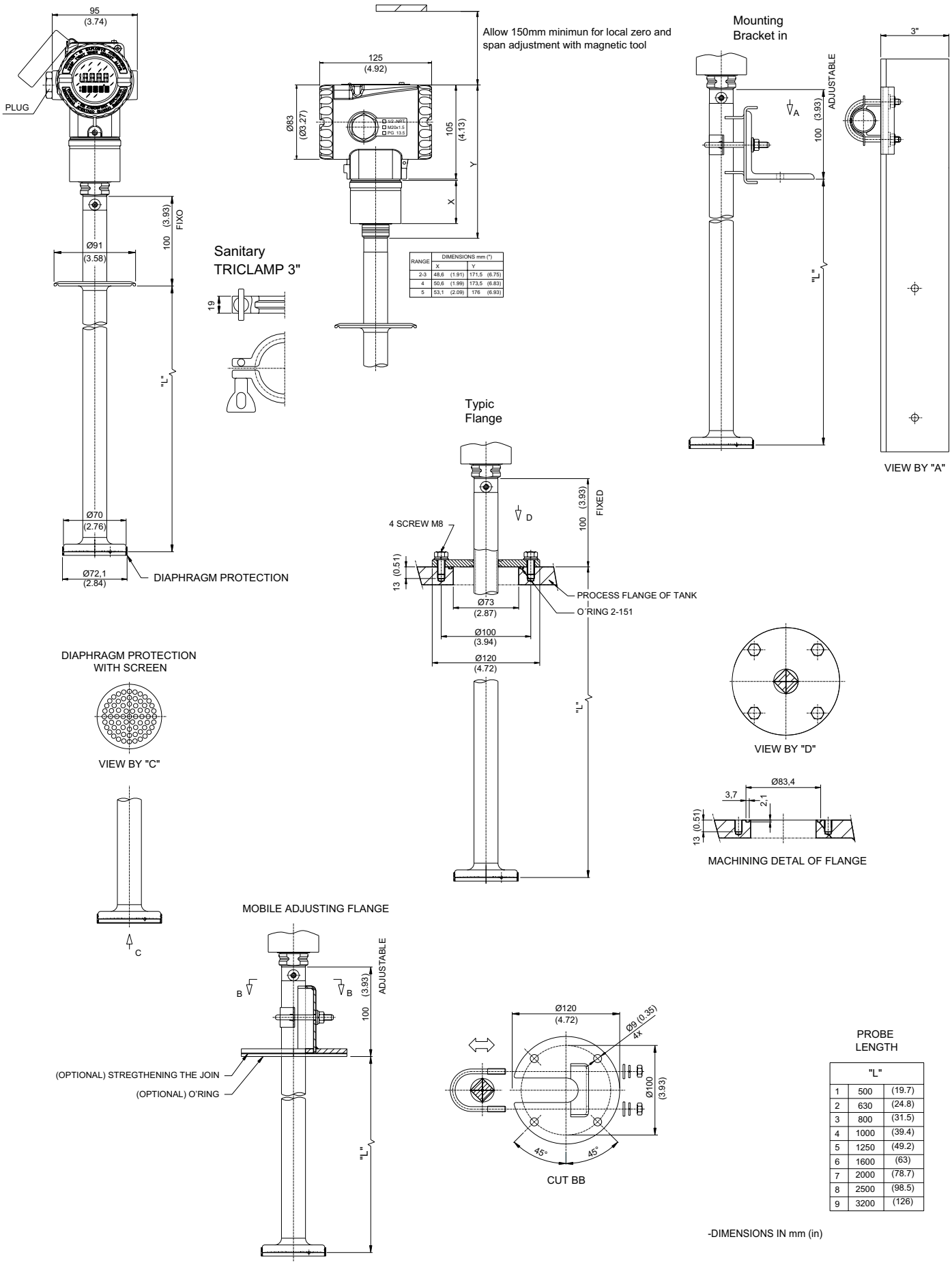

PROBE LENGTH

	"L"	
1	500	(19.7)
2	630	(24.8)
3	800	(31.5)
4	1000	(39.4)
5	1250	(49.2)
6	1600	(63)
7	2000	(78.7)
8	2500	(98.5)
9	3200	(126)

RANGE	DIMENSIONS mm (")	
	X	Y
2-3	48,6 (1.91)	171,5 (6.75)
4	50,6 (1.99)	173,5 (6.83)
5	53,1 (2.09)	176 (6.93)

-DIMENSIONS IN mm (in)

LD400I - Wireless Pressure Transmitter with Extended Probe

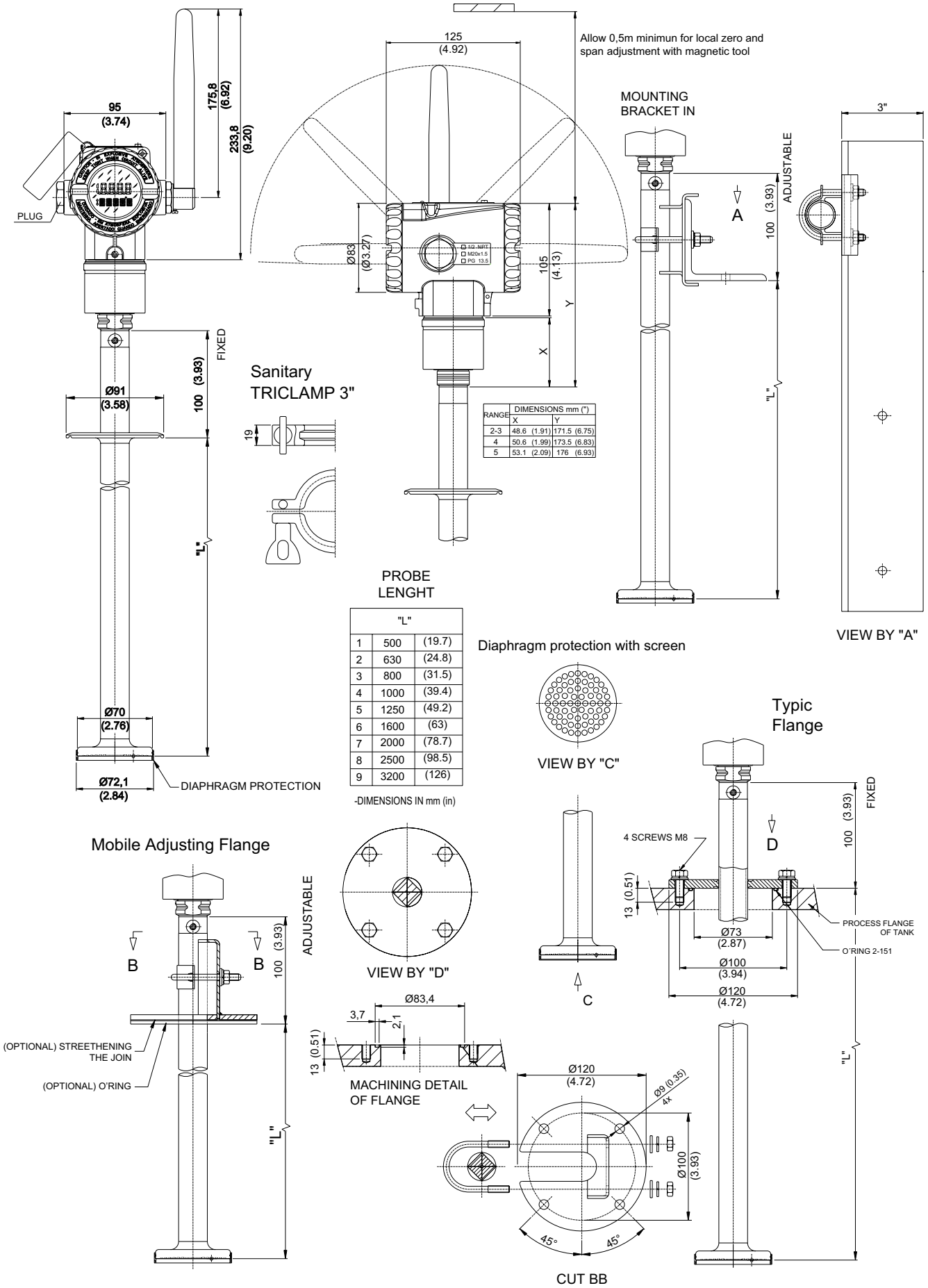

RANGE	DIMENSIONS mm (")	
	X	Y
2-3	48.6 (1.91)	171.5 (6.75)
4	50.6 (1.99)	173.5 (6.83)
5	53.1 (2.09)	176 (6.93)

	"L"	
1	500	(19.7)
2	630	(24.8)
3	800	(31.5)
4	1000	(39.4)
5	1250	(49.2)
6	1600	(63)
7	2000	(78.7)
8	2500	(98.5)
9	3200	(126)

-DIMENSIONS IN mm (in)

LD400 Series

Pressure Measurement Transmitters

Remote Flanged Connection

SMS Sanitary Connection

LD400SIS - For Safety Instrumented Systems

Integral Flanged Connection

Consult our representatives

ATEX INMETRO IECEx

Rua Dr. Antônio Furlan Junior, 1028 - Sertãozinho, SP - CEP: 14170-480
insales@smar.com.br | +55 (16) 3946-3599 | www.smar.com

smar
Technology Company